LiquidWatch®

Probe Leak Detection System

Installation and Operation Manual

PermAlert™

Division of Perma-Pipe, Inc.

Notice

The information contained in this manual, including but not limited to any product specifications, is subject to change without notice.

Caution --This manual may not be up-to-date.

Please check the Perma-Pipe, Inc. website, www.permalert.com, for the latest revision of this manual. The manual is typically revised at least once a year. The revision date is on the back cover.

Contact techsupport@permalert.com for technical assistance with the LiquidWatch system.

Table of Contents

1 Introduction

1.1 General Description

This LiquidWatch® Installation and Operation Manual is intended for use as a general guide for LiquidWatch Leak Detection Systems. Users (installers) should independently evaluate the suitability of this information and PermAlert's products for their application and specific installation. If you received a PermAlert product that is not described in this manual, contact PermAlert for the appropriate instructions.

1.2 Applications

The LiquidWatch system consists of an electronic microprocessor-based alarm panel that monitors probes. The probes may be installed in many applications including: secondary contained piping, double wall tanks, sumps, computer room subfloors, cleanroom subfloors or any area where liquids need to be detected. There are two LiquidWatch models available:

- Model LW64 monitors up to 64 probes in ordinary locations.
- Model LW64-IS monitors up to 64 probes in Class I, Division 1, Groups C & D, hazardous locations.

Each base system will monitor up to 8 probes and has a common alarm output relay. If additional probes or output relays are required, the following modules are available:

- Model RPM-8 is a remote probe module that can monitor up to 8 probes.
- Model ORM-4 is an output relay module with 4, 10 A, 250 VAC rated relays.
- Model ORP-16 is an output relay panel with 4, 10 A, 250 VAC rated relays, expandable to 16 relays.

1.3 Receiving and Handling Precautions

The following general precautions should be observed:

1. Read this manual carefully before beginning any work. **Do not use substitute materials or short cut recommended procedures**. Understanding and following this guide is essential to avoid installation problems.
2. Collect the needed quantities of all materials well in advance of scheduled work.
3. Check the packing list against received items. **Report immediately any shortages or damaged materials to the delivering carrier**.
4. All probes must be tested immediately upon receipt following the probe test procedures contained in this manual. Report immediately to PermAlert any probes that fail this quality control test.
5. System drawings, provided by the designer, should indicate the extent, general location and arrangement of leak detection equipment and probes. The contractor (installer) should become familiar with all details of the installation before proceeding.
6. A qualified electrician should perform electrical work.

1.4 Material and Equipment Normally Supplied by PermAlert

Each system may include the following items as quoted:

1. Leak detection alarm panel
2. Communication cable
3. Lead wire
4. Probe adapter assembly
5. Probes

6. Watertight junction boxes conforming to NEMA 4X

Maximum No. of Cable Junctions in Enclosure	Enclosure Dimensions
4	6” x 6” x 4”
6	8” x 6” x 4”
8	10” x 8” x 4”

7. Watertight cord grips
8. Shrink tubing for cable connectors
9. RTV adhesive/sealant for cable connectors

1.5 Material and Equipment Normally Supplied by Contractor

Each system may require the installing contractor to supply the following items:

1. Electrical conduit, junction boxes and wiring, as required.
2. Ohmmeter for testing.
3. Hot air gun for shrink tube application on connector assemblies.

NOTE:

All probe lead and communication cable should be run in conduit to protect the cable from physical damage. In an area subject to strong electrical interference, grounded metal conduit is recommended. Contact PermAlert for additional information.

1.6 LiquidWatch Components

The following LiquidWatch components are available for replacement or expansion:

Model	**Part No.**	**Description**
LW64	**8027570**	**LiquidWatch Monitoring Unit**
LW64-IS	**8027571**	**LiquidWatch Intrinsically Safe – UL Listed**
RPM-8	**8027636**	**LiquidWatch Remote Probe Module (connects up to 8 probes)**
ORM-4	**8027637**	**LiquidWatch Relay Module w/ 1 RM-4 (4 relays)**
ORP-16	**8027583**	**LiquidWatch Relay Panel w/ 1 RM-4, expandable to 4**
PA-10	**8027638**	**LiquidWatch Probe Adapter to Interface with Non-Std. Probes**
PHLR-LW	**8027890**	**LiquidWatch Hydrocarbon Probe Assembly**
PFS-LW	**8027902**	**LiquidWatch Float Probe Assembly**
PSTV-LW	**8027903**	**LiquidWatch 2" Tank Well Float Probe Assembly**
PWS-LW	**8027904**	**LiquidWatch Water Probe Assembly**
PTHL-LW	**8027906**	**LiquidWatch Tank Overfill Probe Assembly**

2 LiquidWatch Installation

2.1 Alarm Panel Installation

1. The standard LiquidWatch alarm panel may be permanently mounted indoors or outdoors in an area with an ambient temperature of not less than 0°F and not exceeding 120°F. The enclosure must not be located in direct sunlight, to prevent excessive heat buildup.
2. The power conduit entrance should be located in the upper right corner of the enclosure (see Figures 1 and 2). **Model LW64-IS must not have the power conduit in the lower portion of the enclosure, where it will interfere with the partition or the intrinsically safe wiring compartment**. Inspect and clean the interior of the enclosure before continuing. Connect all electrical conduits.
3. It is recommended to connect the unit to an isolated (circuit breaker protected) 100-240 VAC, 50/60 Hz circuit. **Earth ground must be connected** solidly to the ground screw, which is located in the upper right corner of the LiquidWatch alarm panel back plate. **Failure to connect earth ground can result in faulty alarm panel operation**. See Figures 1 and 2 for LiquidWatch alarm units wiring diagrams.
4. The LiquidWatch alarm panel is supplied with an internal probe board that can monitor up to 8 probes. An optional remote probe module, RPM-8, can monitor 8 probes. A total of 7 RPM-8 boards can be monitored for a total system capacity of 64 probes. Each remote probe module is connected in parallel to the internal probe board using a 15 conductor shielded cable.
5. Each probe is supplied with 20 feet of shielded probe lead cable and an integral probe adapter. Additional probe lead cable is required if the probes are not located close enough to the alarm panel or remote probe modules. It is recommended to run all lead cable in conduit for protection of the cable.
6. The LW64-IS system has a partition covering the internal probe board. Remove the partition (cover) over the probe board on the LiquidWatch panel by removing the 5 mounting screws.
7. Install the lead cables using the instructions in this manual. The cable must exit the enclosure under the partition for LiquidWatch Model LW64-IS (see Figures 2 and 3).

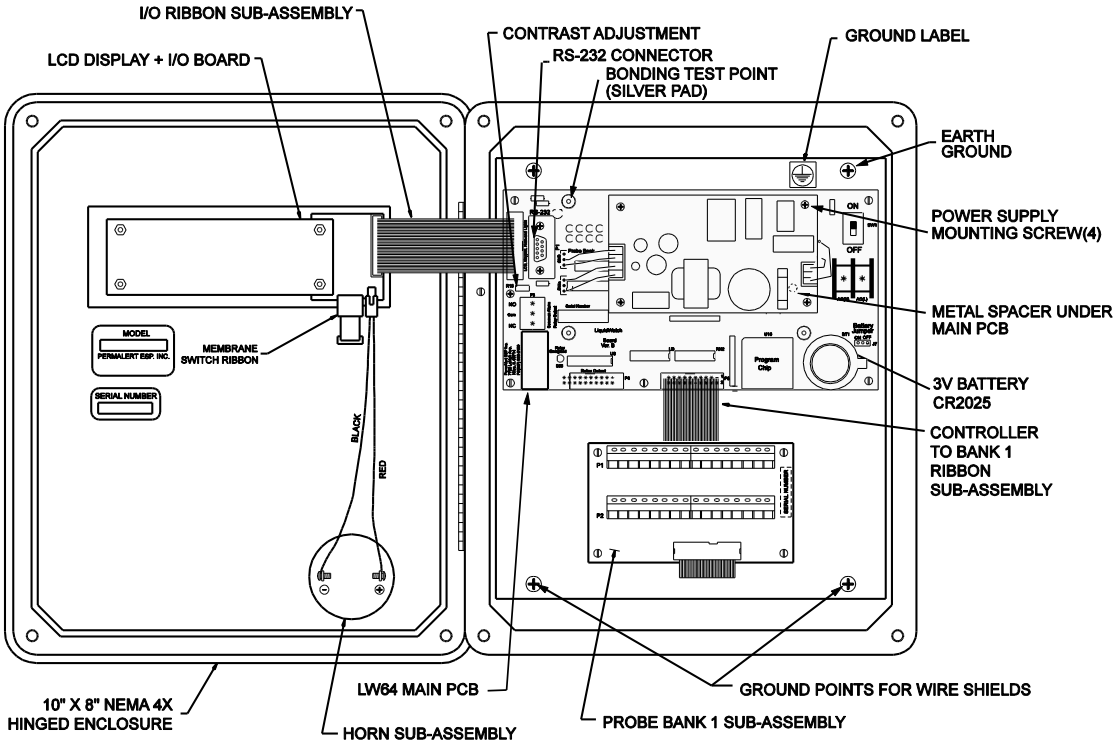

Figure 1
Component Layout for LiquidWatch Model LW64

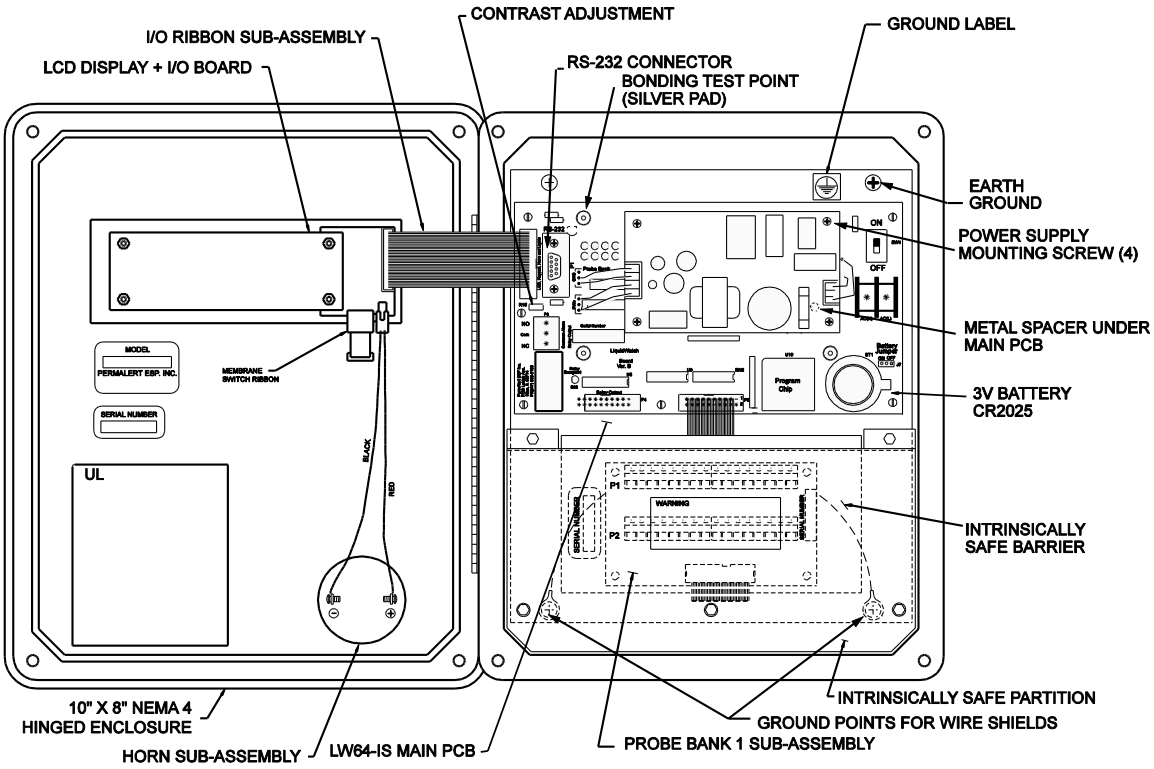

Figure 2
Component Layout for LiquidWatch Model LW64-IS

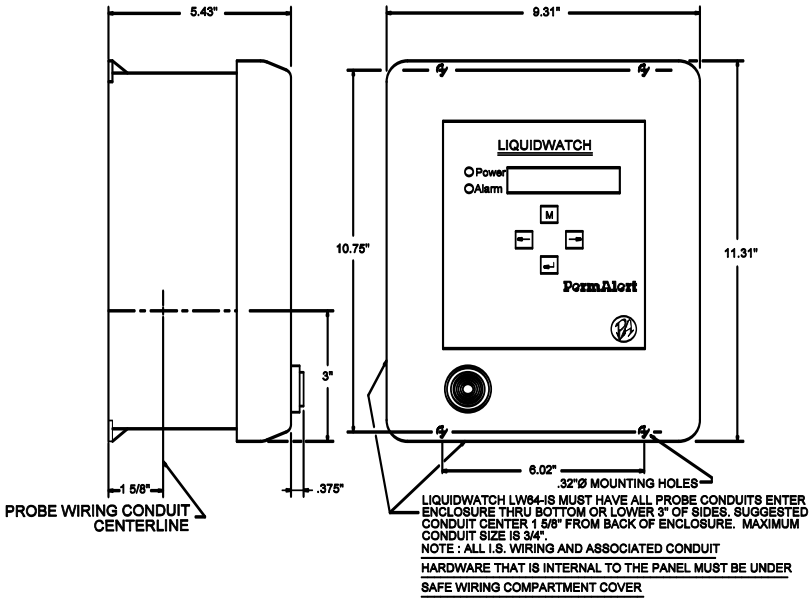

Figure 3
Enclosure Dimensions

2.2 Internal Wiring

LiquidWatch is shipped with a 2 line x 20 characters LCD, a green LED (power), a red LED (alarm), and a horn on the door of the panel. The wiring for the horn is a 2-wire cable connected to a connector on the back of the LCD. The keypad is a 4 key membrane switch. The green LED is illuminated when the panel is powered. The red LED is illuminated when any probe is in alarm.

There are ground wires that must be securely connected to the white backplate mounting screws. In each case, the external tooth lock washer should be placed against the white painted backplate and then the ring terminal placed on top of the lock washer (see Figures 1 and 2 for Ver. B LiquidWatch Controller Board):

- LiquidWatch model LW64-IS has 2 ground wires from the intrinsically safe barrier that are factory-installed to the 2 mounting screws beneath the intrinsically safe partition. If the backplate is removed and reinstalled, reconnect the ground wires.
- The shield wires from all shielded probe leads and communication cables must be connected to either of the mounting screws at the bottom of the backplate as shown. The shield wires should be connected together in a ring terminal(s) (#10 stud).

2.2.1 Terminals

The terminals on RPM-8 Remote Probe Modules and RM-4 Relay Modules are now a quick-connect design that provides an easy, fast and robust connection. A flat blade screwdriver, 1/8" [3.5 mm], is used to press down on the terminal lever and open the terminal for easy wire insertion. Release the lever and the wire is tightly clamped. **The acceptable wire size for connection to any terminal, is 28 - 12 AWG [0.08-2.5 mm^2].** The terminals can accommodate solid or stranded wires. **If ferrules are used with stranded wire, the maximum wire size is 14 AWG [1.5 mm^2].** Refer to figure 5. **Caution: The lever only travels 1/8" [3.5 mm] to open the terminal completely, and only requires 5 - 8 lbs [2-4 kg] force. Do not exceed these limits or the terminal will be damaged.**

2.3 Control Relays

When LiquidWatch detects a fault condition, it switches a SPDT common alarm output relay rated for 250 VAC, 10 A. This relay is located on the main controller board. **LiquidWatch is shipped with the relays configured to operate in a normally energized mode, so they de-energize in the alarm state and are not reset until the alarm condition is cleared.**

When LiquidWatch is in alarm, the silence key can be pressed to silence the horn. If an optional output relay module(s) is installed, 4 relays per module are available. The relay(s) remains switched until the fault is cleared or the active probe is taken off-line.

2.4 RS-232 Port

LiquidWatch is provided with an RS-232 communications port. Refer to Figures 1 or 2 for the location. There is a 9-pin connector located on the controller board.

2.5 Intrinsically Safe - UL/CUL

LiquidWatch LW64-IS is Listed by Underwriters Laboratories, Inc., for use in ordinary locations. LW64-IS provides intrinsically safe output circuits for use in Class 1, Division 1, Groups C and D hazardous locations when used with LiquidWatch sensor probes and installed in accordance with the instructions in this manual. Refer to Section 3.1 for specific probe UL requirements. Also, refer to LiquidWatch control drawing, Figure 4, for intrinsic safety requirements.

THE MAXIMUM OPERATING VOLTAGE ALLOWED IN THE LIQUIDWATCH PANEL IS 250 VAC. IN ADDITION, THE VOLTAGE ON ANY WIRES TO THE CONTROL RELAYS MUST BE LIMITED TO 250 VAC.

The partition (cage) must be installed over the intrinsically safe barrier and internal probe board before operating the system**.**

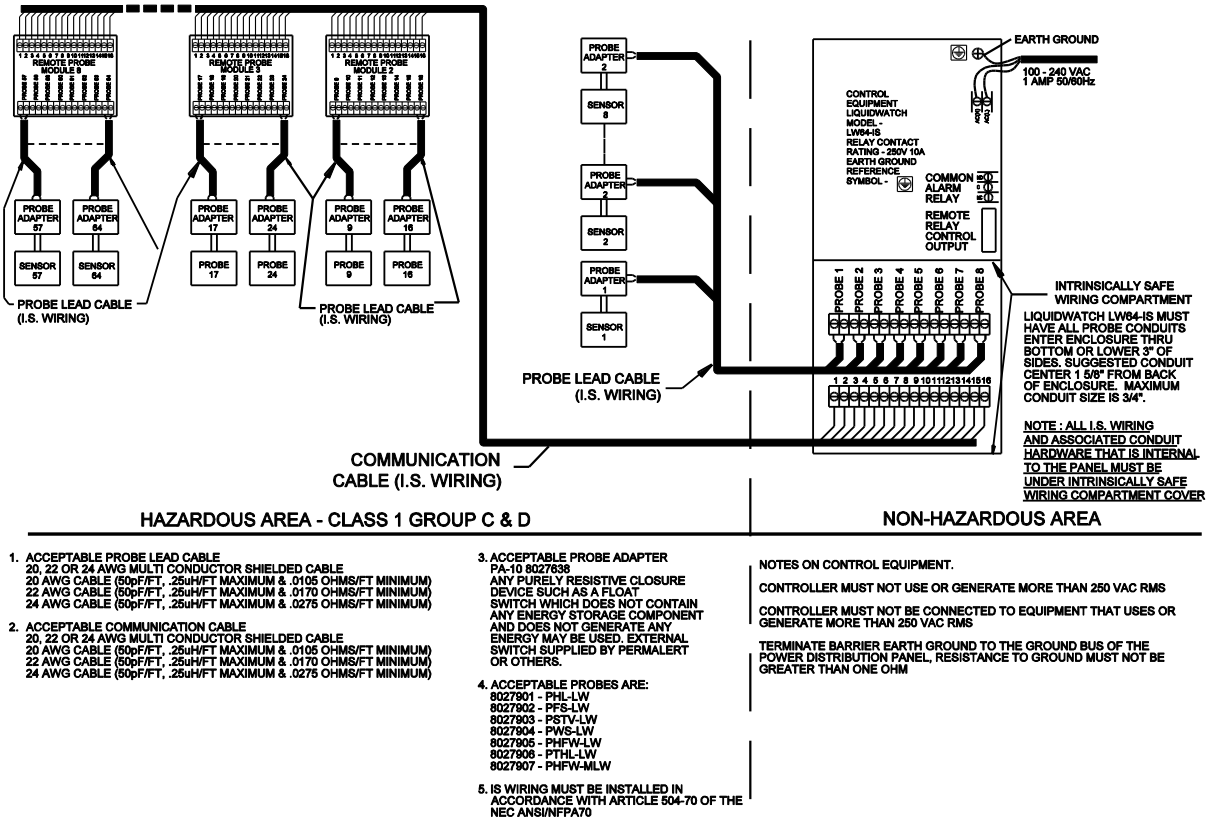

Figure 4
LiquidWatch Control Drawing

2.6 FCC

The user is cautioned that any changes or modifications, not expressly approved by the party responsible for FCC compliance, could void the user's authority to operate the equipment.

NOTE: This equipment has been tested and found to comply with the limits for a Class A digital device, pursuant to Part 15 of the FCC Rules. These limits are designed to provide reasonable protection against harmful interference when the equipment is operated in a commercial environment. This equipment generates, uses and can radiate radio frequency energy and if not installed and used in accordance with this instruction manual, may cause harmful interference to radio communications. Operation of this equipment in a residential area is likely to cause harmful interference in which case the user will be required to correct the interference at his own expense.

3 Probe Installation

3.1 UL/CUL LiquidWatch Requirements

The LiquidWatch model LW64-IS is listed by Underwriters Laboratories, Inc. and provides intrinsically safe output circuits for use in Class 1, Division 1, Groups C and D hazardous locations when used with probes listed below and installed in accordance with the instruction in this manual.

The approved probe configurations are:

1. PHL-LW solid-state hydrocarbon sensor and PWS-LW solid-state water or conductive liquid sensor.
2. All PermAlert supplied probes and float switches with an integral LW-PA probe adapter, which operate as a simple dry contact switch closure.
3. A PermAlert LW-PA probe adapter connected to a customer supplied switch, if the switch operates as a simple dry contact closure with no external power supplied to the switch. The switch may operate as normally open or normally closed.
4. PHLR-LW hydrocarbon sensor, with the included PA-10 probe adapter, in accordance with note 3 of figure 4, LiquidWatch Control Drawing.

3.2 Probe Configuration

The LiquidWatch alarm panels are designed to monitor up to 64 probes. The 64 probes are organized in 8 banks of 8 probes. The standard alarm unit has probe bank 1 installed within the enclosure (see Figures 1 and 2). This can monitor probes 1 – 8, connected to terminal strip P1. If additional probes are monitored, remote probe modules (Model RPM-8) are required. Each RPM-8 has a bank select jumper, P3 that can be set to bank 2 through bank 8 and will monitor 8 probes as follows (see Figure 5):

Bank	Probe Numbers
2	9 - 16
3	17 - 24
4	25 - 32
5	33 - 40
6	41 - 48
7	49 - 56
8	57 - 64

Labels are supplied to place on the circuit board next to the terminal strip P1 to renumber the probe terminals.

The RPM-8's are connected with a 15 conductor shielded communication cable. The standard communication cable supplied by PermAlert has the following color code and is connected to terminal strip P2, numbered 1 - 16 as follows:

Terminal Pin #	Color	Function
1	Black	Probe #1
2	Not Used	Bank #1 Select
3	White	Probe #2
4	Red	Bank #2 Select
5	Green	Probe #3
6	Orange	Bank #3 Select
7	Blue	Probe #4
8	White/Black	Bank #4 Select
9	Red/Black	Probe #5
10	Green/Black	Bank #5 Select
11	Orange/Black	Probe #6
12	Blue/Black	Bank #6 Select
13	Black/White	Probe #7
14	Red/White	Bank #7 Select
15	Green/White	Probe #8
16	Blue/White	Bank #8 Select

3 Probe Installation

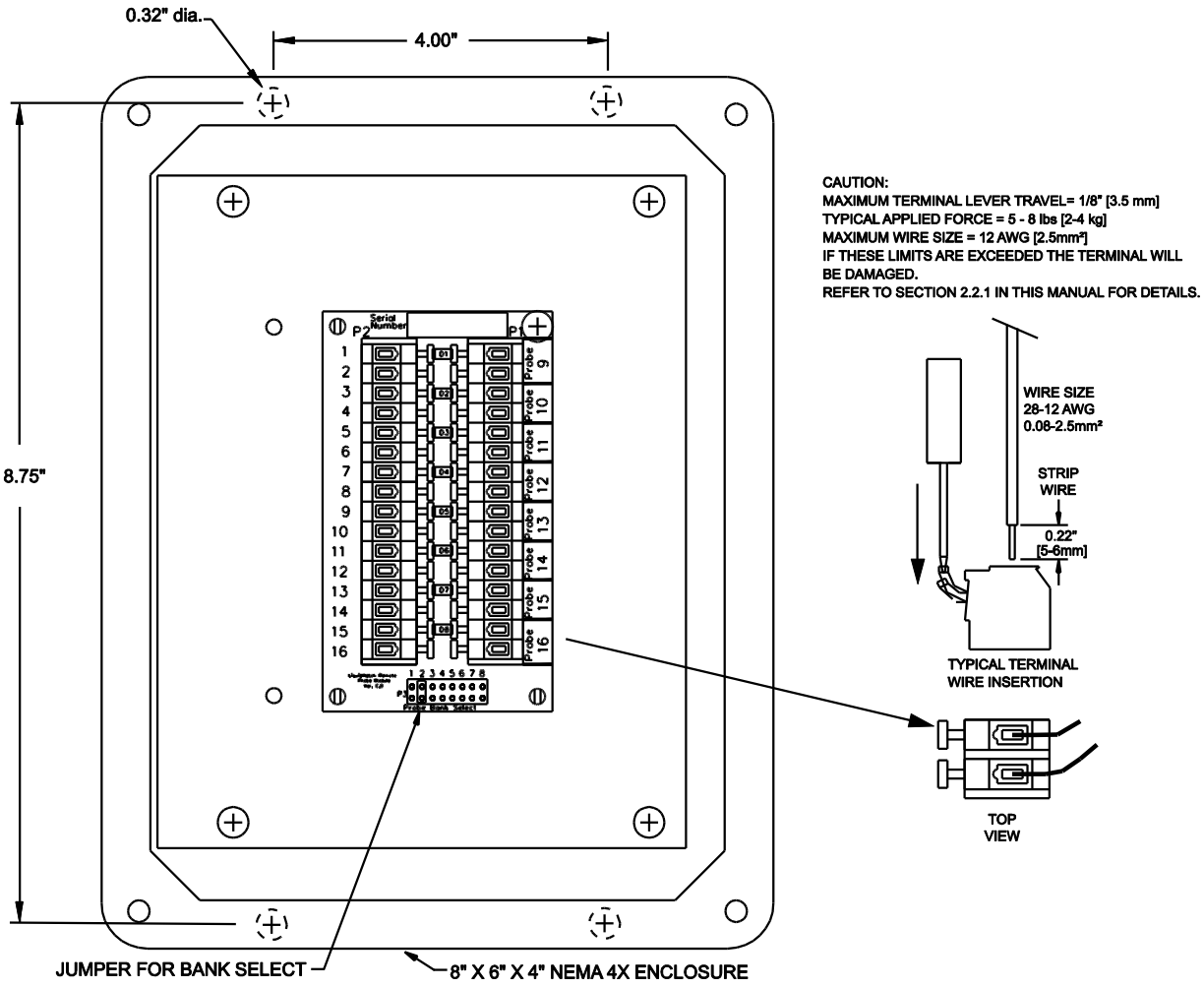

Figure 5
Remote Probe Module

The communication cable runs from P2 on probe bank 1 card in the main enclosure to P2 on the first RPM-8, then to P2 on the next RPM-8, etc. Normally each RPM-8 is set to a unique probe bank select number. The maximum distance from a probe to the main alarm panel (including communication cable) is 20,000 feet. Figure 6 is a typical field-wiring layout.

The communication cable can branch from one RPM-8 to 2 or 3 RPM-8's in a star pattern. This may be convenient if the probes are located in separate areas of a site. The maximum number of communication cables that can be connected together at terminal strip P2 is 4.

When 2 or more wires are going into the same terminal, it is recommended that a wire crimp ferrule be used to crimp the wires together. Then a single ferrule is inserted into each terminal pin. This will make installation easier and reduce field-wiring errors. The following is a guide for crimping 2, 3, or 4 wires together.

Number of wires	Ferrule size (AWG)	Crimp tool setting (mm)
2	16* or 14	1.0* or 1.5
3	14	1.5
4	14	1.5

* A #16 AWG ferrule is the largest size allowed connected to P2 on probe bank 1 on Model LW64-IS. PermAlert recommends using Eclipse Model 300-016 Wire Ferrule Crimp Tool or equivalent, available from PermAlert.

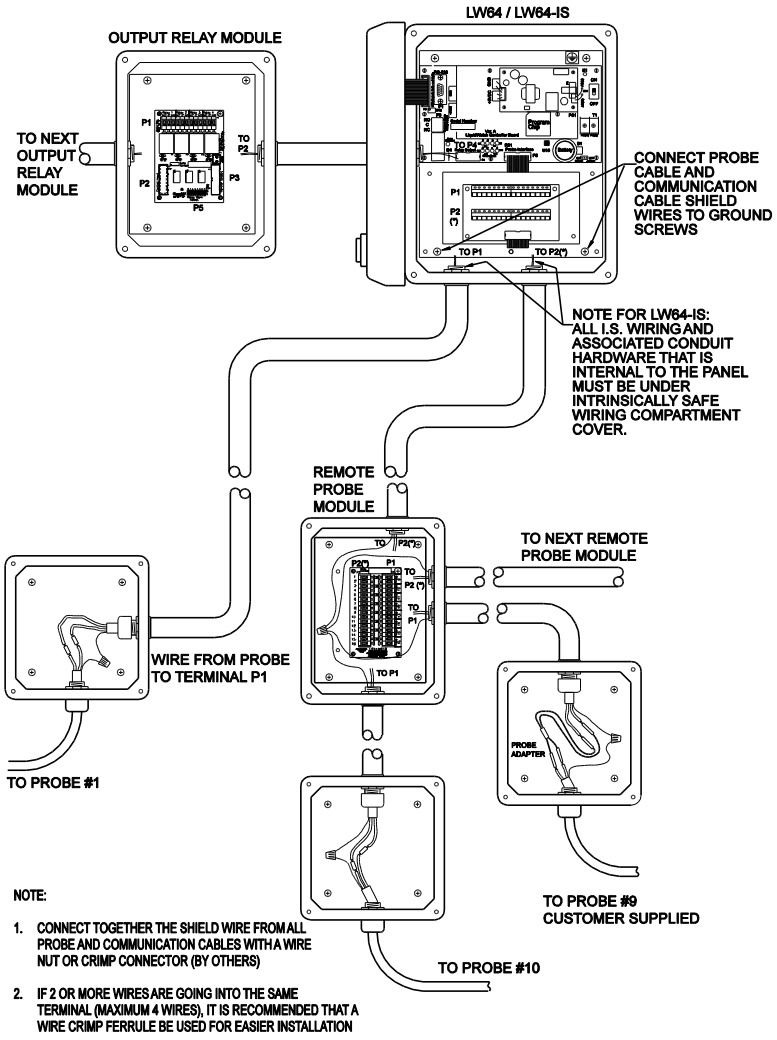

Figure 6
LiquidWatch Field Wiring Diagram

3.3 Probe Installation

1. Each PermAlert supplied probe is furnished with an integral probe adapter. Probe adapters are also available to connect customer supplied probes to the LiquidWatch monitoring system. A standard 6” x 6” x 4” junction box can house several probe adapters or several standard probe splices (see Figures 7 and 8). (PermAlert can supply NEMA 4X junction boxes and cord grips.)

2. Mount a junction box or a remote probe module at a location close to the point being monitored. PermAlert supplies probes with 20 feet of probe lead cable, but additional lead cable may be used if necessary.

3. Figures 10 through 13 show typical probe installations. Install the probe and use electrical conduit and/or watertight cord grips, as necessary, to prevent water entry where the probe lead penetrates the monitored area. Cord grip part # 8057955 is for the probe lead cable.

4. Once the probe is installed, the probe lead should be routed to the junction box or the remote probe module. Trim the excess length of the probe lead before splicing it. Splice the leads by using the crimp connectors supplied with the probe or probe adapter. Make sure the shrink tubing on the connector covers the insulation of the wires, so no bare copper wire is exposed. Heat the splice with a heat gun to seal the adhesive-lined shrink tubing on the connector (see Figures 7 and 8).

5. **The shields from each communication cable and all probe cables in a junction box must be connected together at each RPM-8. The shields must be grounded in the alarm panel to one of the 4 mounting screws for the backplate (see Section 2.2)**.

6. **Be very careful when removing the jacket of the communication cable and probe cables. Do not nick the wire insulation. If the insulation is cut, the shield may short the wire to ground. It is time-consuming to locate the damaged insulation and the resulting intermittent short after the system is installed.**

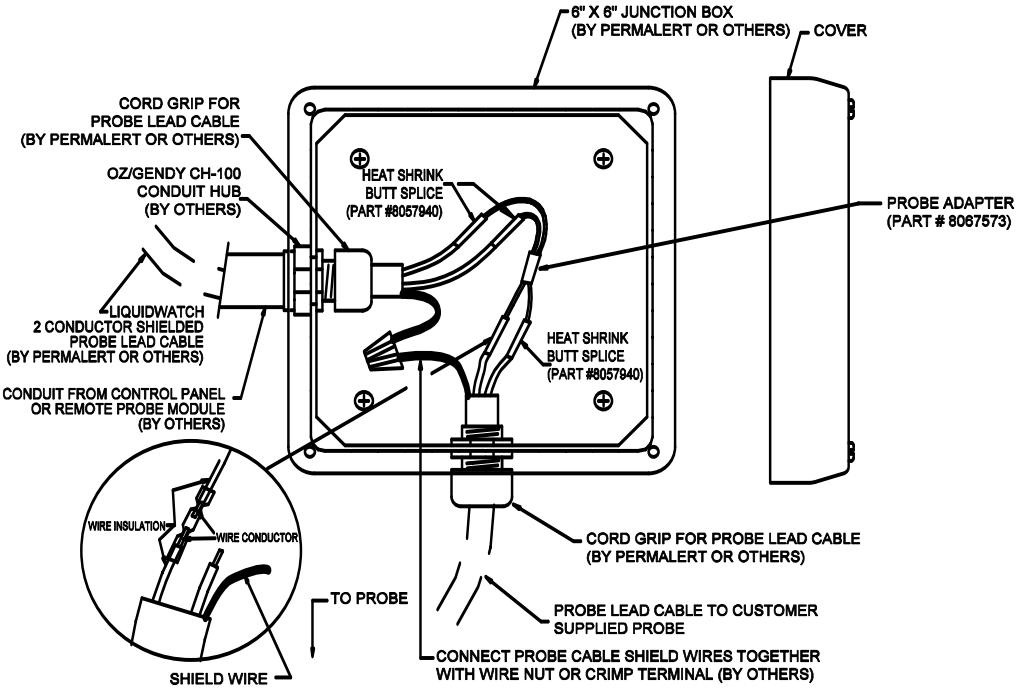

Figure 7
Probe Adapter Installation

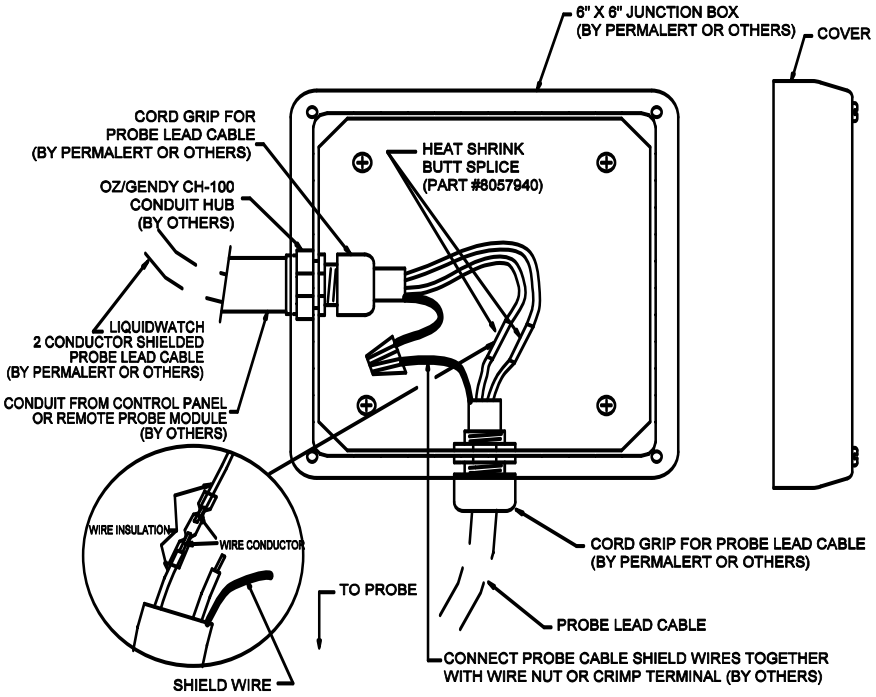

Figure 8
Probe Installation

3.4 Surge Suppressor

An optional Surge Suppressor (Model LWSA, part no. 8027572) is available for installations where lightning strikes are prevalent near the LiquidWatch probes or probe wiring. The LWSA includes a 10” x 8” NEMA 4X enclosure. The suppressor reduces the possibility of an induced voltage in the cable, caused by a lightning strike, damaging the LiquidWatch panel.

Typically, the enclosure is located close to the LiquidWatch Alarm Panel and is connected to it by an 18-conductor cable (only 16 conductors are needed). The cable is installed from terminal strip P2 on the Probe Bank 1 card in the main panel to terminal strip P3 in the LWSA. Probes 1-8 are connected to terminal strip P1 in the LWSA instead of the original Probe Bank 1 card. A 15-conductor communications cable is connected to terminal strip P2 if additional RPM-8s are installed.

The 12” green ground wire is soldered to the LWSA PCB and must be securely connected to earth ground. The shield wires from all shielded probe leads and communication cables in the enclosure must be connected to the earth ground connection.

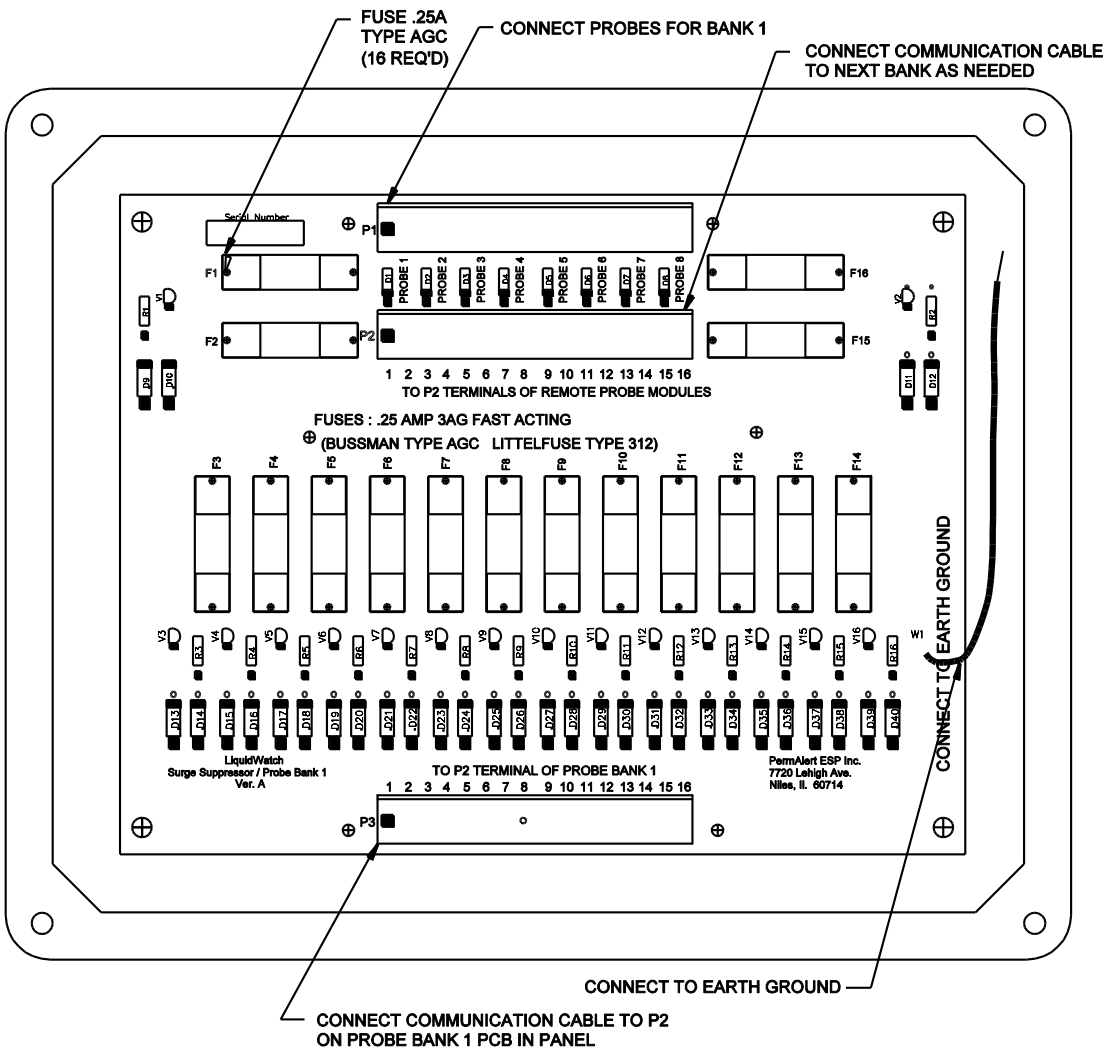

Figure 9
Optional Surge Suppressor

3.5 Typical Installations

Figures 10 through 14 show typical installations.

Contained Pipe

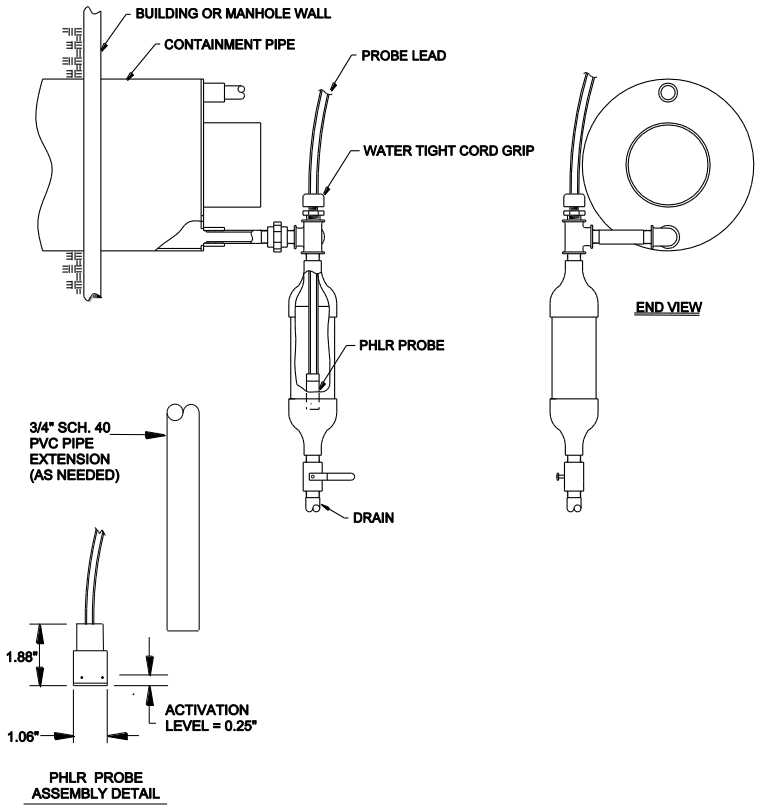

Pressurized Contained Pipe

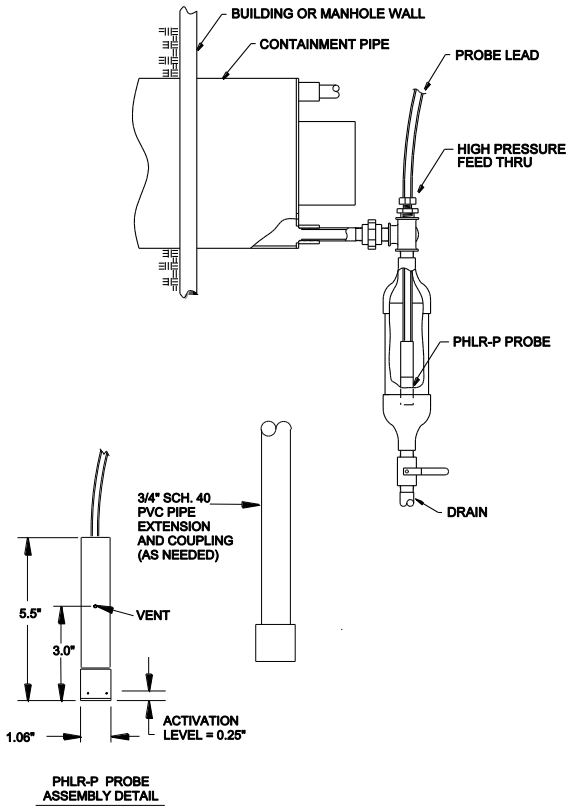

Double-Wall Tanks

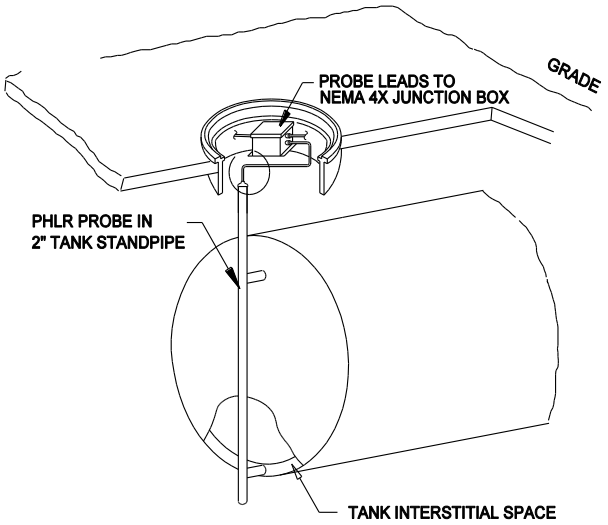

Contained Area

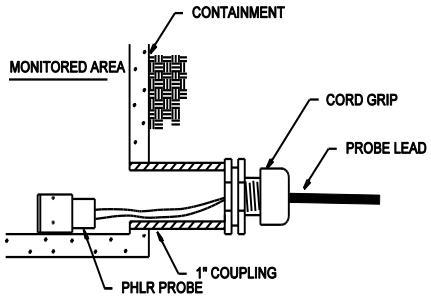

Figure 10
Typical PHLR-LW and PHLR-P-LW Probe Installations

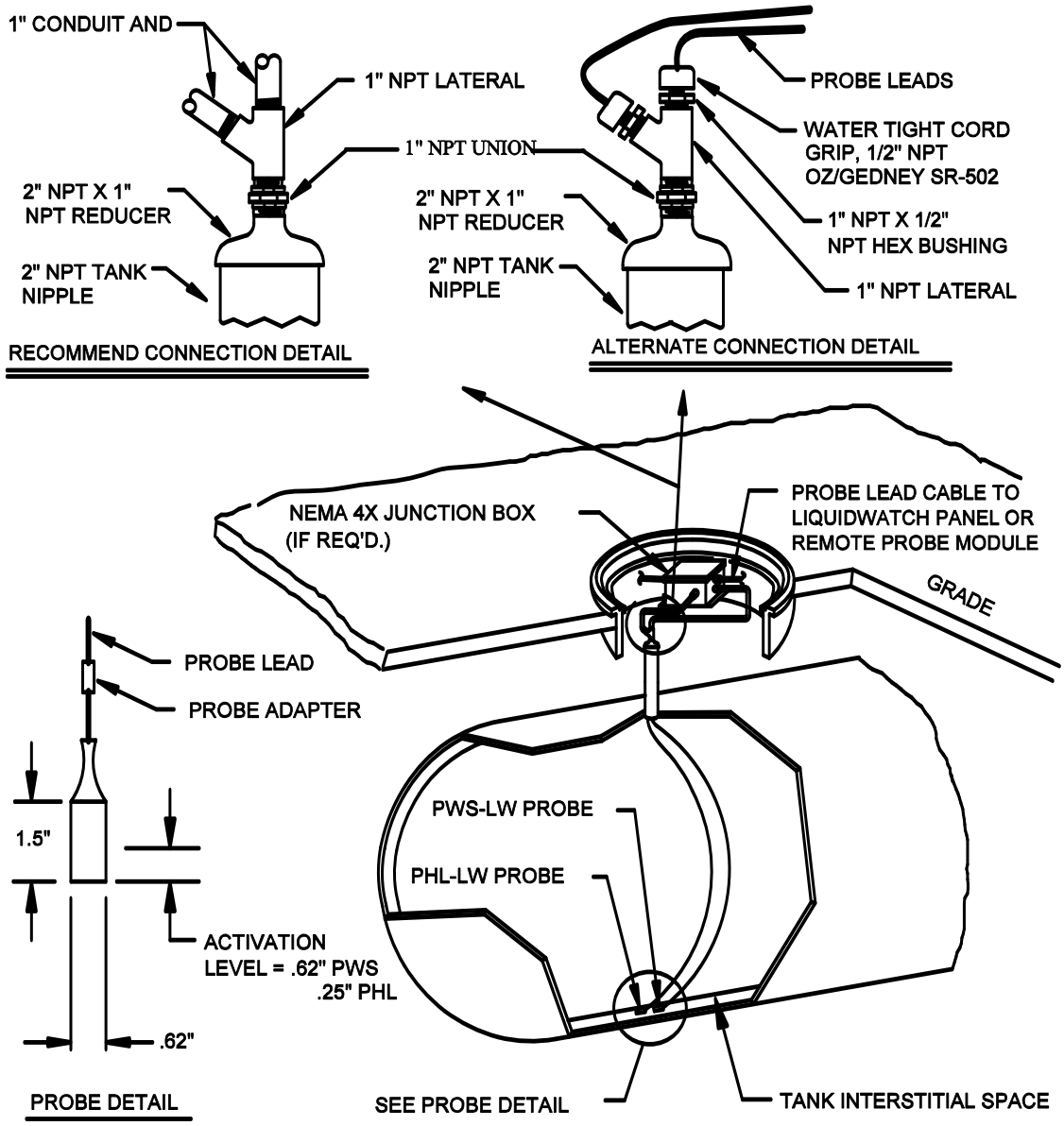

NOTES:

1. LENGTH OF PROBE LEAD IS 20 FEET MAX.

Figure 11
Typical PHL-LW and/or PWS-LW Probe Installation

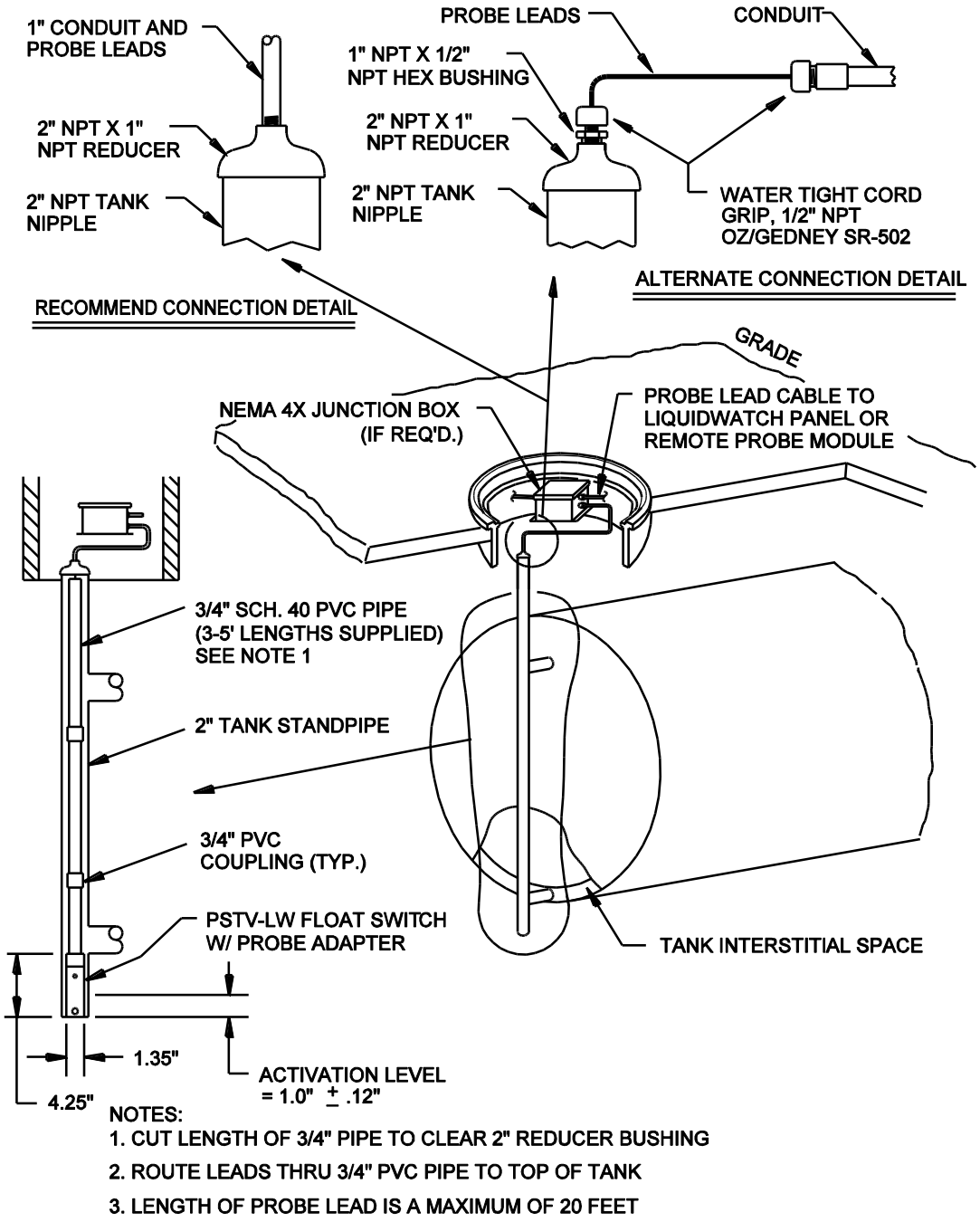

Figure 12
Typical PSTV-LW Tank Float Switch Installation

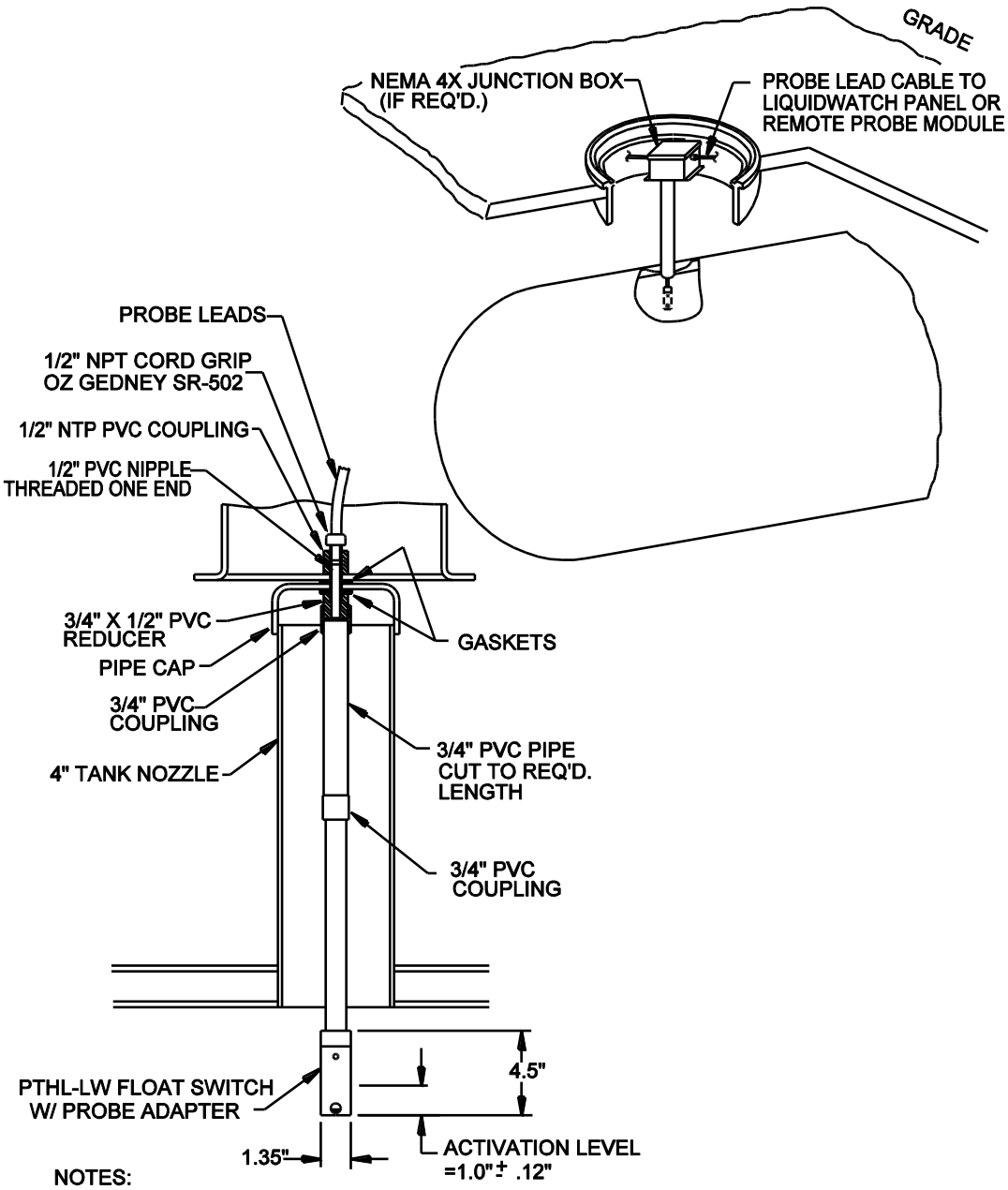

NOTES:

1. DRILL 7/8" HOLE IN JUNCTION BOX AND PIPE CAP.
2. CUT UNTHREADED END OF 1/2" PVC NIPPLE TO CORRECT LENGTH TO CLAMP THE JUNCTION BOX AND GASKETS TO THE PIPE CAP.
3. SOLVENT WELD 1/2" PVC NIPPLE TO 3/4" x 1/2" REDUCER.
4. CUT 3/4" PIPE TO LENGTH AS REQUIRED AND SOLVENT WELD ALL JOINTS.

Figure 13
Typical PTHL-LW Float Switch Installation

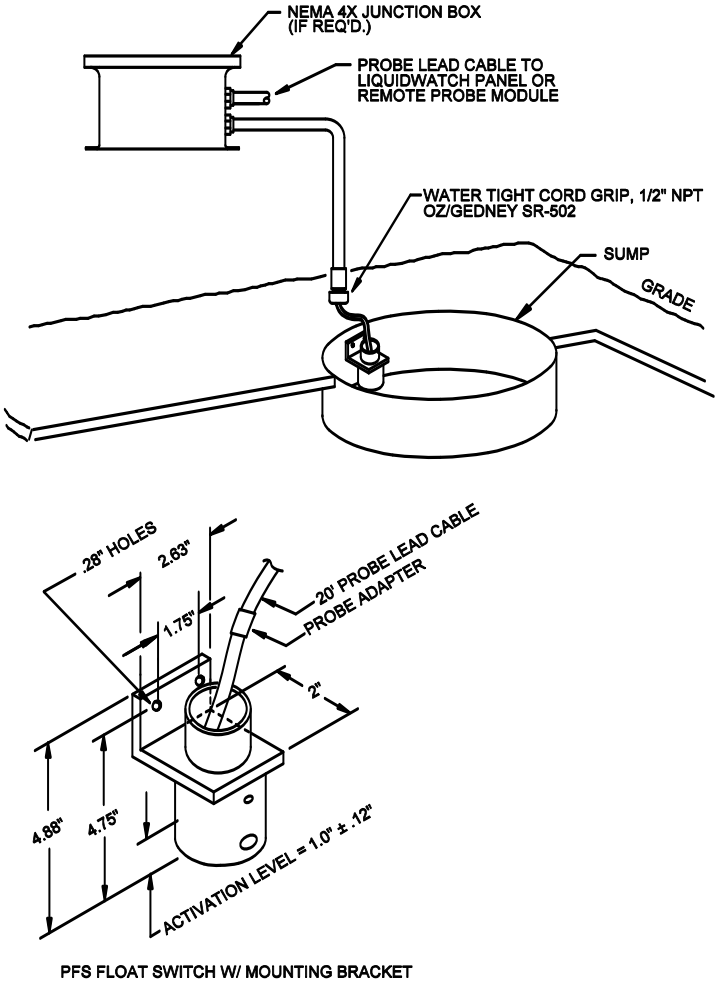

Figure 14
Typical PFS-LW Installation

3.6 PHLR Hydrocarbon Probe

The PHLR series is a reusable hydrocarbon probe that detects hydrocarbon liquids in sumps, interstitial spaces of pipes and any other areas where hydrocarbon liquids can accumulate to a depth of ¼". The probe is designed to detect fuels (gasoline, diesel fuel, jet fuel, crude oil, etc.) and many hydrocarbon solvents. The probe is reusable by cleaning or replacing the sensor elements. There are 2 models of the PHLR probe available:

- The standard PHLR is designed for non-pressurized locations such as sumps, manholes, and non-pressurized containments. The PHLR can be installed in any orientation – vertical or horizontal.
- The PHLR-P is designed for pressurized containment applications. This model is ideal for typical sealed, containment piping systems that are maintained under pressure with a nitrogen or air blanket. The PHLR-P should be installed in a vertical orientation. **The PHLR-P has vent holes that must not be submerged in a liquid before the containment is pressurized** (see Figure 10).

An extension to the probe housing can easily be added with standard ¾" Schedule 40 PVC pipe to accommodate installation requirements.

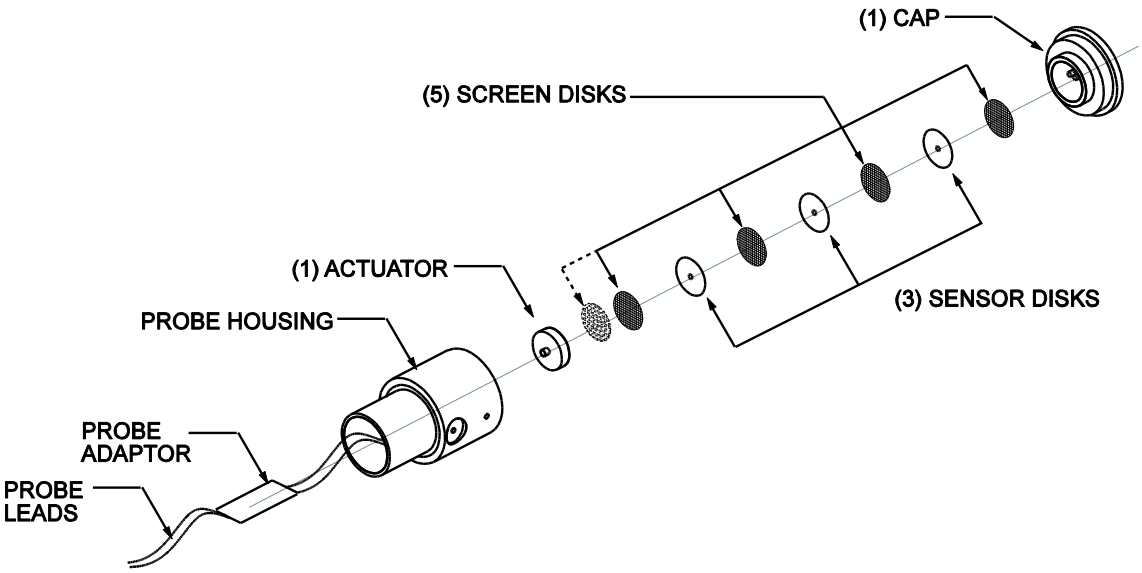

Figure 15
PHLR Sensor Package

3.6.1 Cleaning Sensor Elements Procedure

The replacement sensor package consists of 8 disks: 5 screen disks and 3 sensor disks as shown in Figure 15. The replacement package includes all removable parts: probe cap, sensor elements, and actuator. Replacement sensor elements only can also be purchased.

The following procedure is a general guideline to follow to clean the probe and sensor elements after exposure to hydrocarbon liquids. **Caution: It is the user's responsibility to determine safety precautions and the suitability of exposing personnel to the hydrocarbon liquid on the probes and various cleaning solvents suggested.**

The sensor disks swell after exposure to fuels and solvents. The swelling forces the actuator to move and operate a low-force sealed switch. Volatile hydrocarbon liquids, such as gasoline, will eventually evaporate resulting in the sensor disks returning to their original size. This allows the switch to return to the normal position. A faster resetting process is to disassemble the probe to speed the evaporation of

the liquid. Other liquids such as diesel fuel and jet fuel, which do not evaporate, must be flushed with a solvent to remove the contamination. Disassemble and clean the probe as follows:

1. Remove excess hydrocarbon contamination from the exterior of the probe.
2. Hold the switch in a vertical position with the cap downward and unscrew the cap. It is suggested to do this over a table so the small parts are not lost if they are dropped. **Be very careful not to lose the sensor disks.** They are very similar to contact lenses in size and texture.
3. Place the actuator, screens, cap, and sensor disks into a small container of solvent. Coleman Camp Fuel, which is naphtha, works well and evaporates very quickly. Other solvents that evaporate quickly and completely are also suitable.
4. Soak the components for a minute or two and then remove them.
5. Let the solvent evaporate until the disks return to the original diameter and fit into the cap easily. If the sensor disks do not slip easily into the circular holder in the cap, repeat the cleaning process. The disks should be about 0.5” diameter when dry.
6. Reassemble the switch. Carefully alternate the 4 screens and 3 sensor disks in the cap as shown in Figure 15. Place the actuator on top of the top screen. The actuator has a small point in the center of one side that must face the probe housing as shown. Hold the probe housing vertically and screw the cap finger-tight into the bottom of the housing.
7. If response time is over 5 minutes for diesel fuel at room temperature, insert the optional 5th screen next to the actuator. Make sure the extra screen does not activate the probe when it is tightened. If so, remove the extra screen. The extra screen accommodates manufacturing tolerances and reduces the amount of swelling of the sensor disks that is required before the probe activates.

3.6.2 Testing the PHLR

The assembled probe can be easily tested with an ohmmeter and a small paperclip.

1. Connect the ohmmeter leads to the probe leads.
2. The reading should be 8k-10k ohms.
3. Insert the paper clip into one of the five holes in the center of the cap and press gently (1-2 oz of force) into the switch.
4. The ohmmeter should read 150k-160k ohms.
5. Remove the paper clip and the reading should return to the original low reading.
6. Disconnect the ohmmeter.

3.6.3 Troubleshooting

If the test results are not as expected, the following checks should help determine the problem.

- If the original reading is 150k-160k ohms then
  - Check that the sensor disks and screens are installed correctly. They must be flat, not folded over.
  - Verify that the diameter has returned to the original size. Clean again if needed.
  - If the optional 5th screen adjacent to the actuator is installed, it should be removed.
- If the ohmmeter reading is not 150k-160k ohms when the paperclip is inserted, then
  - Check that the meter leads or probe wires are not shorted together.
  - Disassemble the probe and make sure the actuator point is oriented properly to press into the center of the switch in the probe housing.

3.7 Probe Tests

All LiquidWatch probes change resistance when switched from the normal “Good” state to the “Active” state. The probe leads can be removed from the terminal strip and a probe tested with an ohmmeter according to the “resistance” columns in the following table:

PROBE READING WITH PROBE ADAPTER INSTALLED				
	NORMAL		ACTIVE	
	RESISTANCE	A/D READING	RESISTANCE	A/D READING
PHLR-LW	8K-10K	180-210	150K-160K	55-70
PHLR-P-LW	8K-10K	180-210	150K-160K	55-70
PHL-LW	8K-20K	170-210	80K-160K	55-90
PWS-LW	150K-160K	50-70	8K-35K*	140-210
PSTV-LW	8K-10K	180-210	150K-160K	55-70
PFS-LW	8K-10K	180-210	150K-160K	55-70
PTHL-LW	8K-10K	180-210	150K-160K	55-70
Normally-Closed Contact	8K-10K	180-210	150K-160K	55-70
Normally-Open Contact	150K-160K	55-70	8K-10K	180-210

*Note: The PWS-LW probe active resistance range is an initial reading when an ohmmeter is connected. The value will increase after a second or two. Reverse the meter leads to obtain a new reading.

The probes and connecting wiring can also be tested without removing them from the circuit. This is described in Setup, Section 5.3 of this manual. If the probe is not “Good” as determined from the “A/D Reading” columns then check the probe and wiring and correct the problem.

3.7.1 PHL-LW - Tests

The PHL probe cannot be exposed to water for long periods of time. Continued exposure will damage the probe and it will no longer respond to hydrocarbons**.** The probe should be installed in normally dry locations. It will be available for a limited time for those applications which require the smaller, 5/8” diameter.

The PHLR series probe replaces the PHL and is strongly recommended for all applications, including those where the probe is exposed to water frequently.

WARNING: If a hydrocarbon probe is submerged in water, a hydrocarbon spill may float on the surface of the water and not contact the sensor.

The hydrocarbon probe, PHL-LW, can be tested by gently placing it into a volatile solvent such as trichloroethylene or Coleman fuel. The resistance reading should match the chart above. **(*DO NOT* agitate or swirl the probe in any hydrocarbon liquid. It may damage the sensor element).** When the probe is removed and the solvent evaporates, the resistance reading should return to the normal range.

3.7.2 PHL-LW - Reset

The probe will need to be flushed with a volatile solvent if it has been exposed to non-volatile liquids, such as diesel fuel or oil. To flush the probe, gently place it in the solvent for several seconds and then remove it. As the solvent evaporates, the resistance reading of the probe should return to the normal range. These steps may need to be repeated several times. Exposure to non-volatile hydrocarbon liquids may require the probe to be replaced.

4 Output Relay Module Installation

4.1 Output Relay Module Wiring

The LiquidWatch leak detection system is supplied with a common alarm relay that is switched if any probe is in alarm. If specific relay activation is required for a specific probe, 1 to 4 output relay modules, ORM-4, can be installed. Each ORM-4 includes an 8” x 6” x 4” NEMA 4X enclosure and an RM-4 Relay Module consisting of 4, 10 A, 250 VAC, form C contact relays. The relays are organized in 4 banks of 4. Each relay module has a bank select jumper, P5 that can be set to bank 1 through bank 4 and configure the relays as follows:

Bank	Relay Number
1	1 - 4
2	5 - 8
3	9 - 12
4	13 - 16

Labels are supplied to place on the circuit board next to terminal strip P1 to renumber the relays.

The relays are energized in the normal state and de-energized in alarm conditions. Therefore, the common (C) and normally open (NO) contacts are closed in normal conditions. The output relay cannot be reset until the alarm condition is clear or the probe is taken off-line.

Each ORM-4 enclosure is located next to the LiquidWatch panel. The enclosure is the same as the RPM-8 enclosure (see figure 5 for mounting dimensions). A 36” ribbon cable connects plug P4 on the main controller board to plug P2 on the first ORM-4. Additional ORM-4s are connected in series from plug P3 on one board to plug P2 on the next, etc. (see Figures 6 and 16).

PermAlert also offers an optional ORP-16 Output Relay Panel. The ORP- 16 includes a 10” x 8” x 4” NEMA 4X enclosure and one RM-4 Relay Module. It is expandable to house a maximum of four RM-4s or 16 relays.

Each ORP-16 Output Relay Panel also includes 4 ribbon cables. All ribbons will only be used if 4 RM-4s are installed (save extra ribbons for later expansion in the panels). There are two #1 ribbons that are each 2” long and connect plug P2 to plug P3 on adjacent RM-4s. A 10” ribbon, ribbon #2, is used inside the panel to connect P2 and P3 as shown. The 36” ribbon, ribbon #3, runs from P4 on the LW-64/LW-64-IS main controller board to P2 on the first RM-4 in the relay panel.

The relay wiring terminals will accept #26 – #16AWG wire.

4 Output Relay Installation

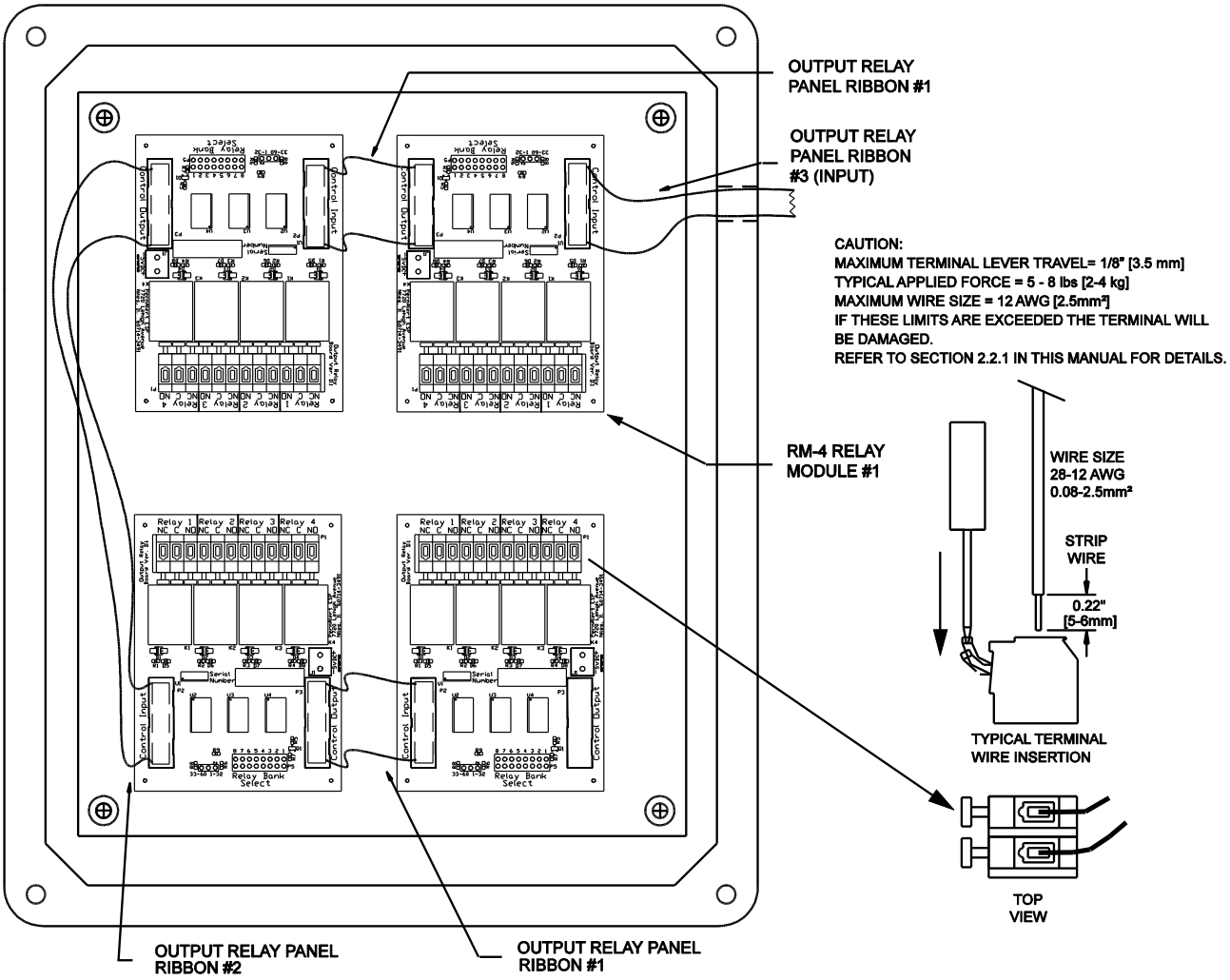

Figure 16
ORP-16 Output Relay Panel

5 LiquidWatch Operation

5.1 General

5.1.1 Theory of Operation

LiquidWatch is a microprocessor based leak detection system that monitors the change in resistance of probes. PermAlert offers probes that detect hydrocarbon liquids, water-based conductive liquids, float switch level changes and contact closures of customer-supplied equipment. LiquidWatch is expandable and can monitor up to 64 probes and provide 16 output relays. Each probe can be configured to activate a specific relay. LiquidWatch detects 4 probe conditions:

1 Active
2 Break
3 Short
4 Good

Probe conditions are continuously monitored and displayed on an LCD display. LiquidWatch also keeps a non-volatile history of the most recent 75 events.

5.1.2 Power Up

LiquidWatch has a power switch inside the enclosure on the main controller board. Power should be fed directly from a dedicated circuit breaker to LiquidWatch. If the green power light on LiquidWatch is not lit, check the circuit breaker and the power switch.

5.1.3 Initial Display

LiquidWatch uses a 4-digit keypad for menu selection and data entry. If LiquidWatch is monitoring, press “M” to go to the Main Menu. If “M” is pressed again, the panel returns to monitor. The “➔” key increments the item displayed and “🡐” key decrements the displayed item. The “Enter/Silence” key is used to enter the value displayed and also to silence the alarm. A two-line liquid-crystal display (LCD) shows information about the operation of the system.

LiquidWatch displays the following message when it is turned on after the copyright message:

```
LIQUIDWATCH    VX.XX
“TIME”        “DATE”
```

VX.XX” is the firmware version LiquidWatch is using. The message is displayed during a 5-minute warm-up period and then LiquidWatch enters monitor mode. The warm-up delay can be bypassed by pressing “M”. If so, LiquidWatch goes immediately to the Main Menu and displays the message:

```
  MAIN MENU 1 OF 5
      SETUP
```

5.1.4 Contrast Adjustment

The contrast of the LCD can be adjusted by turning the adjustment screw, R13, on the controller board (see Figures 1 and 2). This may be necessary to get the best viewing angle, depending on the mounting height of the LiquidWatch panel.

5.1.5 Clock Battery

The time and date information is stored in battery backed-up memory as long as the battery is charged and the battery jumper is in the “ON” position (left two pins of the battery jumper header - Figure 1 or 2). **The battery jumper is shipped in the “OFF” position and should be moved to “ON” when the system is installed** (see Section 5.7.2).

LiquidWatch displays "**" in the "seconds" location when the battery needs to be replaced. A replacement battery, CR2025, is available from PermAlert. If the power is lost when the battery is low or the jumper is in the "OFF" position, the time and date information will be lost and the clock will be reset to 1/1/2000.

5.1.6 Installation Instructions

Detailed installation instructions are provided in this manual.

****ALL APPLICABLE MANUALS MUST BE REVIEWED AND UNDERSTOOD PRIOR TO INSTALLATION****

5.2 Operating LiquidWatch

LiquidWatch lists the primary functions in a Main Menu. The LCD displays one menu function at a time. **Read the display carefully. LiquidWatch prompts for the information it needs**. Press the "➔" to step through the Main Menu and display the next menu function (or "🡐" to display the previous). Several menu functions have timers that cause LiquidWatch to return to monitoring if no keys are pressed within a predefined period of time.

This manual uses examples of display messages. "TIME" and "DATE" represent a display of a specific time or date.

The Main Menu Functions available in LiquidWatch are:

1. SETUP
2. PROBE ON/OFF
3. HISTORY
4. DISPLAY SETUP
5. CONFIGURATION

The normal procedure for setting up a new system is to select function 1 and then answer the questions displayed on the LCD.

5.3 Setup

LiquidWatch uses the setup function to enter probe data into memory. To select this function press the "Enter" key when setup is displayed in the Main Menu.

```
MAIN MENU 1 OF 5
    SETUP
```

The first message is:

```
SETUP MENU  SELECT
PROBE # 01 OF 08
```

Use the "🡐" and "➔" keys to select the correct probe number and then press "Enter". If the maximum number of probes installed is shown incorrectly (8 in this case), go to Section 5.7.3 and configure the system.

Next, select the type of probe installed by scrolling through the list of 4 types. Press "Enter" when the correct one is displayed. "NC" and "NO" refer to normally closed and normally open, respectively. All float switches supplied by PermAlert are setup as "NC Contact".

```
SETUP MENU    TYPE
HYDROCARBON   1 OF 4
```

```
SETUP MENU    TYPE
WATER         2 OF 4
```

```
SETUP MENU    TYPE
NC CONTACT    3 OF 4
```

```
SETUP MENU    TYPE
NO CONTACT    4 OF 4
```

Next select which relay is switched when the selected probe is activated if an optional output relay module(s) is installed. If relay #00 is selected, then no output relays will be assigned to the selected probe. More than 1 probe can select the same relay. The common alarm relay on the main board is switched when any probe is activated.

If the maximum number of relays is shown incorrectly (4 in this case) go to Section 5.7.4 and configure the system. Select the relay and press “Enter”.

```
SETUP MENU  SELECT
RELAY # 00 OF 04
```

At this time LiquidWatch will test the probe to see if it is within acceptable limits for the probe type selected.

```
SETUP MENU TESTING
PROBE # 01 OF 08
```

One of the following messages is then displayed:

```
SETUP MENU  GOOD
PROBE # 01  000
```

```
SETUP MENU  BREAK
PROBE # 01  000
```

```
SETUP MENU  ACTIVE
PROBE # 01  000
```

```
SETUP MENU  SHORT
PROBE # 01  000
```

The number at the end of the second line is between 0 and 254 and is used for diagnostic purposes. The values may be compared to the table in Section 3.7, “Probe Tests”. A “Break” or “Short” alarm indicates a problem with the probe lead cable between the panel and the probe adapter on the probe. An “Active” message indicates the probe is active or the probe lead cable from the probe to the probe adapter is damaged.

Press “Enter” to continue to save the probe setup data and go to the next probe. Then either repeat these steps for another probe or press “M” to return to the Main Menu.

5.4 Probe On/Off

LiquidWatch uses the probe On/Off function to add or remove a probe from the list of monitored probes. To select the function, scroll through the Main Menu to function 2 and press “Enter”.

```
MAIN MENU 2 OF 5
  PROBE ON/OFF
```

The first message displays the first setup probe. LiquidWatch displays the status of the probe on the second line.

```
PROBE ON/OFF STATUS
PROBE # 01  ON
```

Press “➔” or “🡐” to display the next setup probe. Press “Enter” to change the status of the selected probe or “M” to return to the Main Menu. If no probes are setup, the panel displays “No Probes Setup”.

5.5 History

The History function displays the 75 most recent events detected by LiquidWatch in Last-In-First-Out sequence (LIFO). To select this function, scroll through the Main Menu to function 3 and press “Enter”.

```
MAIN MENU 3 OF 5
    HISTORY
```

The last or most recent archived event is displayed. Use the arrow keys to scroll through the archives. “🡐” displays the previous entry and “➔” displays the next entry in chronological order. The second line of all messages is the time and date of the event. LiquidWatch saves 8 types of messages. The first 2 document a loss of power of more than 30 minutes.

```
POWER LOST AT
“TIME”        “DATE”
```

```
POWER RESTORED AT
“TIME”        “DATE”
```

There are 2 messages documenting when a probe is turned ON/OFF-line using Main Menu function 2:

```
PROBE # 01 OFF
“TIME”        “DATE”
```

```
PROBE # 01 ON
“TIME”        “DATE”
```

LiquidWatch archives 3 types of faults:

```
PROBE # 01 ACTIVE
"TIME"        "DATE"
```

```
PROBE # 01 BREAK
"TIME"        "DATE"
```

```
PROBE # 01 SHORT
"TIME"        "DATE"
```

When the history has scrolled to one end, the message is:

```
END OF HISTORY
NO MORE MESSAGES
```

Return to the Main Menu at any time by pressing "M".

5.6 Display Setup

The Display Setup function shows the probe type, associated output relay (if any) and a diagnostic number, for all probes that are setup. To select Display Setup, scroll in the Main Menu to function 4 and press "Enter".

```
  MAIN MENU 4 OF 5
   DISPLAY SETUP
```

The first line displays the probe number and output relay, which is associated with the probe. A listing of "RELAY-00" means no output relay module relay is assigned and only the common alarm relay activates when the probe is in a fault condition. The second line displays the type of probe and a diagnostic number (0-255).

```
PROBE— 01  RELAY— 00
TYPE HYDROCARBON 255
```

If the data is incorrect, return to the Setup function and reenter the data. Press one of the scroll keys to select another probe or press "M" to return to the Main Menu.

5.7 Configuration

The Configuration Menu has 7 functions:

1. Test Mode
2. Time and Date
3. Number of Probes
4. Number of Relays
5. System I.D.
6. Baud Rate
7. Phone Number
8. Version

Select function 5, Configuration, from the Main Menu and press "Enter".

```
MAIN MENU 5 OF 5
 CONFIGURATION
```

5.7.1 Test Mode

Function 1 in the Configuration Menu is Test Mode, which tests all relays, alarm and the front panel red LED.

```
CONFIGURATION MENU
1 OF 8 TEST MODE
```

To test the alarm, press the left arrow key. Press the right arrow to clear it.

```
CONFIGURATION MENU
LEFT TO TEST ALARM
```

```
CONFIGURATION MENU
RIGHT TO CLEAR ALARM
```

In test mode, the red LED is illuminated, the alarm sounds, and the relays de-energize. When cleared, the red LED and horn are “off” and the relays (also green LED, D4, on the main board) energize. Press “Enter” to return to the Configuration Menu.

5.7.2 Time and Date

From the Configuration Menu, select function 2 to set the time and date and press “Enter”.

```
CONFIGURATION MENU
2 OF 8 TIME AND DATE
```

Use the scroll keys to select the correct year and then press “Enter”. In a similar manner select the month, day, hours, and minutes. LiquidWatch returns to the Configuration Menu at the end.

```
CONFIGURATION MENU
SET YEAR 2001
```

```
CONFIGURATION MENU
SET MONTH 01
```

```
CONFIGURATION MENU
SET DAY 05
```

```
CONFIGURATION MENU
SET HOURS   14
```

```
CONFIGURATION MENU
SET MINUTES 35
```

5.7.3 Number of Probes

Function 3 sets the maximum number of probes that can be entered in setup or any of the other functions. This limits the time to scroll through the list of probes. The maximum number can be any multiple of 8, from 8 to 64, depending on how many remote probe modules are installed. To set the number, select function 3 in the Configuration Menu.

```
CONFIGURATION MENU
3 OF 8 # OF PROBES
```

Use the arrow keys to select the maximum number of probes. Press “Enter” or “M” to return to the Configuration Menu.

```
CONFIGURATION MENU
MAXIMUM # OF PROBES-08
```

5.7.4 Number of Relays

Function 4 sets the number of relays installed. Each Output Relay Module has 4 relays, so numbers between 0 and 16 in multiples of 4 are available. To set the maximum number of relays, select function 4 from the Configuration Menu.

```
CONFIGURATION MENU
4 OF 8 # OF RELAYS
```

Use the arrow keys to select the maximum number of output relays. Press “Enter” or “M” to return to the Configuration Menu.

```
CONFIGURATION MENU
MAX # OF RELAYS – 04
```

5.7.5 System I.D.

LiquidWatch can communicate with PermAlert’s PALCOM™ communication software for continuous monitoring of up to 254 systems from one location. LiquidWatch may be connected through its RS-232 port by a 3-wire cable, a short haul modem or a phone modem to the host PC running PALCOM. (See PermAlert’s “PALCOM Operating Manual” for further details.) If PALCOM is used, each LiquidWatch system must have a unique address or system I.D. To set the system I.D., select function 5 from the Configuration Menu.

```
CONFIGURATION MENU
5 OF 8  SYSTEM I.D.
```

Use the arrow keys to select the correct system from 001 to 254. Press “Enter” or “M” to return to the Configuration Menu.

```
CONFIGURATION MENU
SYSTEM 1.D. # - 001
```

5.7.6 Baud Rate

The baud rate for RS-232 communications must also be set for LiquidWatch to communicate with PALCOM. The baud rate is selectable from 300, 600, 1200, 2400, 4800 and 9600. To set the system baud rate, select function 6 from the Configuration Menu.

```
CONFIGURATION MENU
6 OF 8  BAUD RATE
```

Use the arrow keys to select the correct baud rate (usually 9600). Press “Enter” or “M” to set the rate and return to the Configuration Menu.

```
CONFIGURATION MENU
BAUD RATE – 9600
```

5.7.7 Phone Number

A phone number must be entered if a LiquidWatch system is connected to the PALCOM computer by a phone modem. The LiquidWatch system will initiate a call to the PALCOM computer if a probe is activated. **If the LiquidWatch system is connected by a short haul modem or a network modem, the phone number must be erased.** To change the phone number, select function 7 from the Configuration Menu.

```
CONFIGURATION MENU
7 OF 8  PHONE NUMBER
```

The following screen will be displayed. The second line displays the digits entered. The numbers 0 - 9 and letters D (DELAY), T (TONE) and P (PULSE) can be selected by scrolling with the arrow keys. When the correct digit is displayed, press "ENTER". After all digits are selected, select "T" or "P" to end the process and clear any following digits. "T" is selected if the phone line has touch-tone service for a push button phone. "P" is selected if the phone has pulse service for a rotary dial phone. **If "T" or "P" is selected as the first digit, the phone number will be erased. This should be done if the LiquidWatch system is not connected to a phone modem.**

```
PH. #: 0-9,D,T or P
9P18479662190
```

5.7.8 Version

Function 8 displays the version number of the LiquidWatch firmware. Select function 8 to view it. Press “Enter” or “M” to return to the Configuration Menu.

```
CONFIGURATION MENU
8 OF 8  VERSION
```

```
LIQUIDWATCH    V1.06
PERMAPIPE INC.
```

Press “M” to return to the Main Menu from the Configuration Menu.

6 Monitoring

6.1 Monitor

LiquidWatch enters monitor mode after a 5-minute delay on power-up, if the “M” key is pressed from the Main Menu, or if no keys are pressed within a set time interval in one of the menu functions. The display alternates several messages when LiquidWatch is in this mode. It shows the bank number it is checking and if the probes are OK. Bank 1 has probes 1–8, Bank 2 has probes 9–16, etc. The constantly changing display is a self-check by LiquidWatch. **When the LCD is not changing, or is blank, it means LiquidWatch is not monitoring for leaks**. If this occurs, notify appropriate personnel immediately.

6.2 Normal Messages Displayed

```
MONITOR PROBE BANK “A”
“TIME” “DATE”
```

“A” is the bank number being monitored. There is a maximum of 8 banks of 8 probes each. LiquidWatch cycles through all banks that have probes on-line.

```
ALL ONLINE PROBES OK
“TIME” “DATE”
```

This message means all probes selected for automatic monitoring are normal.

6.3 Fault Messages Displayed

One of the following messages is displayed for each probe when a fault is detected.

```
PROBE #01 ACTIVE
“TIME” “DATE”
```

OR

```
PROBE #01 BREAK
“TIME” “DATE”
```

OR

```
PROBE #01 SHORT
“TIME” “DATE”
```

Each probe fault is displayed for 2 seconds. After all probe faults are displayed, LiquidWatch displays a list of all probes off-line.

```
PROBE #01 OFFLINE
“TIME” “DATE”
```

Each off-line probe is displayed for 1 second.

6.4 Alarm Silence Feature

When any of the fault displays is shown, the Silence key can be pressed to silence the horn. The alarm silence feature resets after 12 hours if the fault is not corrected and reactivates the alarm.

6.5 Output Relays

When LiquidWatch detects a fault condition, it switches 1 or 2 relays. The first is the common alarm relay. If an output relay module is installed and a relay is assigned to the probe with a fault, the output relay for the appropriate probe number is also switched.

LiquidWatch is shipped with the relays configured to operate in a normally energized mode, so they de-energize in the alarm state. The output relays remain switched until the fault is cleared or the probe is taken off-line.

Appendix

A.1 System Testing

It is recommended that the LiquidWatch system be tested at periodic intervals to insure that the system is operating properly. The following tests should be performed yearly or in accordance with Federal, State or other Local requirements that may require a shorter test interval.

A.1.1 Relay, Light and Alarm Test

This test will de-energize all relays, illuminate the front panel red LED, and activate the alarm horn. This is the “Test Mode” function listed in the Configuration section of this manual.

On the LiquidWatch panel, select function 5, Configuration, from the Main Menu and press “Enter”. Function 1 in the Configuration Menu is Test Mode. Select this function and then press the left arrow key to test the system. This should de-energize the relays, illuminate the red LED and activate the horn. Press the right arrow key to turn off the LED and horn and energize the relays. Press the Enter key to return to the Configuration Menu.

A.1.2 Probe Tests

Individual probes should be tested periodically to verify they activate properly. Refer to section 3.7, “Probe Tests” in this manual for details if the probes do not activate.

A.1.2.1 PHLR-LW Series Probes

The PHLR probes can be tested by immersing the probe in a sample of the liquid that is being monitored. The panel should illuminate the red alarm LED, switch the relay state, and sound the alarm when the leak is detected. After the test the probe sensor elements can be cleaned following the instructions in section 3.6.1 of this manual. The sensor elements can also be easily replaced.

As an alternative, the probe can be tested in Coleman fuel, or naphtha. In that case, the probe can be opened after the test and the sensor element will reset in a few minutes.

The response time is typically less than 1 minute for gasoline and most solvents and less than 5 minutes for diesel fuel.

A.1.2.2 PHL-LW Probe

The PHL probe should only be tested in a volatile hydrocarbon liquid. Coleman camp fuel, or naphtha, is a readily available choice. Exposure to diesel fuel and similar non-volatile liquids may require replacement of the probe. Refer to section 3.7.1 of this manual for details for testing and cleaning the PHL probe. The response time is typically less than 1 minute for detectable hydrocarbon liquids.

A.1.2.3 PWS-LW Probe

The PWS probe can be tested in any conductive water. It will not respond to deionized water or distilled water. Shake the water out of the probe to reset it.

A.1.2.4 PFS-LW, PSTV-LW and PTHL-LW Probes

These float switch type probes can be inspected and tested by inverting the probe and verifying the float slides freely to the active position and the system detects the float movement. Restoring the probe to the original orientation should reset the probe. If the float does not slide freely, the float should be cleaned or replaced.

A.2 Communications Options

LiquidWatch can communicate with an external computer via an RS-232 port. PermAlert offers Windows-based PALCOM Communication software packages that can monitor 254 PAL-AT and LiquidWatch systems.

In addition, software can be written by the customer to read the display and enter keypad data from a remote computer. First, an address command must be sent to the system so it will respond (see Section 5.7.5). The address command is "AD,XX" where "XX" is the “System I.D.” in hexadecimal format. Allowable values are 01 to FE (1 to 254). The “ESCape” key character clears the LiquidWatch input buffer. It is recommended to send “ESC” before the address string at the beginning of each communication session. The corresponding system will respond with a prompt "MON 15M>" (15 may vary).

Now the LiquidWatch system will respond to the display command “DI” and keypad command “KP”. When LiquidWatch receives the ASCII string "DI" it will transmit 2-lines, 20 characters each, plus CR, that echoes the LCD display.

When the LiquidWatch receives the ASCII string "KP," followed by a combination of the characters "1", “2”, "4" and “8” and ending with a ".", it responds in the same manner as if the keypad was used. The characters represent the keypad keys as follows:

LiquidWatch Keypad Key	ASCII Character
Next	1
Menu/Monitor	2
Previous	4
Enter/Silence	8

Data format should be:

8 data bits
1 stop bit
No parity
110 to 9600 baud

A 1/10 second delay between sending each character is recommended.

PS Command

An additional communication command is available. The command is "PS", for “probe status”. When LiquidWatch receives "PS", it answers with 64 lines of data. Each line gives the status of each probe and is 7 bytes long plus a carriage return. The ASCII code answer is decoded as follows:

_ _ _ _ _ _ _+CR
1 2 3 4 5 6 7

Byte #	Description
1&2	Probe # (1-64)
3	Probe Status (defined below) 0 = Activated 1 = Break 2 = Short 3 = Normal 4 = Off-line 5 = N/A
4, 5, 6	Diagnostic A/D value (0-254) (Refer to Probe Tests, Section 3.5)
7	(sum of bytes 1- 6) MOD 10

If there is more than a 5 minute delay between commands received by LiquidWatch, the communication link is broken and the system address command must be resent. When communication is completed with a specific system, send the address command with system number 255 ("AD,FF") to end the communication link.

A.3 Troubleshooting Wiring Problems

General Notes

- The most common problems encountered with LiquidWatch involve wiring installation errors. The errors can be classified in two general areas: 1) incomplete bonding of the shields of the communication cables and probe cable to the panel earth ground and 2) shorts between the cable shields and individual wires where the wire insulation is damaged. Both cases can cause intermittent or constant alarms.
- In general, the term “bonding” refers to creating a solid electrical connection between two or more cable shields, conductors or metallic parts. The shields of the network of communication cables and probe cables are ultimately “bonded” to the ground connection in the LiquidWatch panel. No intermediate grounding of the shield conductors is permitted.
- If the shielded probe and communication cables are not properly installed and bonded, the values obtained during monitoring may change due to “electrical noise” and cause nuisance alarms.
- A short between conductor and shield may result in an alarm that cannot be cleared. A short is typically caused by cutting the jacket of the cable too deeply. If the cut is too deep, the shield, foil and wire insulation may be cut. Then the foil may contact the bare wire conductor.
- If an intermittent fault occurs with the system, these troubleshooting procedures should be followed when the fault is occurring, which allows the use of the LiquidWatch panel in the diagnostic process. It may be on a certain day or at a specific time of day.
- Refer to figures 1, 2, 6, 7 and 8 in the following tests.

The following sections are listed in the recommended sequence to solve wiring problems.

- Check panel connected to earth ground.
- Check communication cable shield for continuity and bonding to earth ground in the panel.
- Check communication cable for shorts.
- Check probe cable for shorts.
- Check probe cable shield for continuity and bonding to the communication cable shield.

A.3.1 Bonding Metal Backplate

- First, make sure the panel is properly bonded to earth ground. The four backplate-mounting screws and one metal spacer between the main PCB and backplate are assembled with external tooth lock washers next to the backplate. The lock washers cut through the paint on the backplate to give a solid metal-to-metal connection. Make sure the lock washers are in place on all 5 screws.
- An ohmmeter should be set to a low resistance scale or auto-ranging and used to verify the resistance from the earth ground conductor (upper right backplate mounting screw) to each of the other three mounting screws and the main PCB bonding test point. The resistance should be less than 2 ohms (Refer to Figures 1 and 2). Make sure the meter is zeroed correctly on the scale selected.

A.3.2 Shield Test Procedures

- This section describes the procedure to troubleshoot a system with one or more Remote Probe Modules (RPM-8) connected by 15-conductor communication cable(s) (see Figure 6). During the following tests, resistance readings are taken on the cable shield and probe wires.
- **Before any resistance reading is taken, disconnect the ribbon cable connecting probe bank 1 to the LiquidWatch controller board (see figure 1) or Intrinsically Safe Barrier (see figure 2). The ribbon cable must be reconnected before LiquidWatch is used to get readings in Setup, as described below.**
- If two communications cables are connected to one RPM-8, the individual wires for each terminal are usually crimped together in one ferrule to ease installation. In some cases, the ferrules need to be cut off in the following tests to separate the wires. If so, wait until all testing is complete before replacing the ferrules.
- The procedures below refer to pin numbers on connector P1 and P2. The 16 numbers are only printed on one side of the probe bank circuit boards, next to connector P2.
- **The ohmmeter COM lead (black) should be connected to the cable shield for resistance readings**.

- **Note:** If a LiquidWatch Surge Suppressor (LWSA) is installed, the LWSA is Bank 1 in the following tests.

A.3.3 Communication Cable Shield Continuity Test

This test checks that the shields of the communication cables connected to P2 are all bonded together.

1. Disconnect the ribbon cable from probe bank 1.
2. Measure the resistance from connector P2, pin 1 to the ground terminal in the panel.
3. If the resistance is <u>not</u> an open circuit, or O.L, then
    a. Inspect the P2 connector at each RPM-8 and all intermediate splices for a short between the wire on terminal 1 and the shield.
    b. Redo step 2 after the problem is corrected.
4. Connect a clip lead from P2, pin 1 to the ground terminal in the panel.
5. At the furthest RPM-8, measure the resistance from P2, pin 1 to the shield. The resistance should be less than 30 ohms/1000 ft. This test verifies the shield is connected to all the RPM-8s.
6. If the resistance is greater than 30 ohms/1000 ft, then
    a. Inspect each cable shield splice and wire splice for P2, pin 1 at each RPM-8 and any intermediate splices for an open connection.
    b. Redo step 5 after the problem is corrected.
7. If the communication cable at P2 branches to other RPM-8s in a star pattern, repeat steps 5 and 6 at the end of each branch.
8. Remove the clip lead from P2, pin1 to the ground terminal in the panel.
9. Connect ribbon cable to probe bank 1.

A.3.4 Communication Cable Shield Short Test

This test checks if there are shorts between the communication cable wires and the shield. In some cases, further tests are required to determine if the short is on the communication cable or a probe cable.

1. Remove ribbon cable from probe bank 1.
2. Measure the resistance from each pin of P2 on probe bank 1 to the shield and proceed as indicated.
    a. Resistance is Open O.L. – Wire OK.
    b. Resistance is less than 500 ohms
        i. Even number pins - Short is located on the communication cable or RPM-8 indicated by the pin number. (pin 2=bank 1, pin 4=bank 2, pin 6=bank 3, etc.)
            1. Remove the bank select jumper on the indicated RPM-8. If the resistance reading is now O.L., then the short is on a probe cable(s) in the selected RPM-8 (see **Probe Cable Short Test**). If the short still exists, there is a short from the selected pin wire to the shield of the communications cables.
        ii. Odd number pins – there is a short from the selected pin wire to the shield of the communications cable.
    c. If resistance is between 500 ohms and 200 k ohms then see **Probe Cable Short Test.**
3. If any pins are shorted, inspect all splices and connections for the indicated wire.
4. Connect ribbon cable to probe bank 1.

A.3.5 Probe Cable Short Test

This test isolates which wire(s) is shorted to the cable shield within a probe bank.

1. Disconnect the even number wires (2, 4, 6, etc.) from P1.
2. Start and pin 1 and measure the resistance from the probe cable shield to terminal P1 odd number pins and the disconnected wires from the even number pins.
3. If any resistance is less than 500 ohms, the selected wire is shorted. Inspect all splices for the selected wire.
4. Check all 16 pins/wires.

5. Reconnect all wires to even number pins when repairs are completed.

Restart A.3.4 test.

A.3.6 Probe Cable "Noise" Test

Perform this test when probe faults are erratic and "noise" caused by poor shielding is suspected on the cables. It determines where the probe cable shield is not properly connected to the probe module.

1. Check the History to see which probes have multiple alarms during a short period.
2. Make sure the ribbon cable is connected to probe bank 1 in the main panel.
3. Run the Setup procedure for all probes on the probe bank that has multiple alarms.
    a. For each probe, record the reading and press the "➔" key to take another reading. Take at least 5 readings.
    b. If the values for a probe are not stable and vary more than 6 counts, minimum to maximum, the wiring should be checked using the **Probe Shield Test** for proper shield termination and grounding.
4. If all probes have stable readings, there still may be a cable problem but the noise source may not be active at the time of testing. In this case, perform the **Probe Shield Test** for the suspected probes.
5. If the shield wire termination was correct in the **Probe Shield Test**, another possible cause of noise is too much unshielded probe cable wire at a splice or terminal strip. Shorten the unshielded probe wire as much as possible and redo the test.

A.3.7 Probe Shield Test

The shield wire between the probe module and the probe is open, most likely at a splice.

1. Disconnect the ribbon cable in the LiquidWatch panel connected to probe bank 1.
2. Locate the nearest splice to the suspected probe (probe adapter).
3. Remove the splices on the 2 wires and shield and temporarily connect all 3 together securely.
4. In the probe module where the probe wires terminate, measure the resistance from the shield to each of the 2 wires from the probe in connector P1. The resistance should be less than 30 ohms/1000 ft. for each wire.
    a. If the resistance is too high, locate and repair any bad splices. Measure the resistance again after repairs.
    b. Reconnect the probe (probe adapter) to the probe cable.
5. Resume A.3.6 test.

Appendix

Warranty

Seller warrants that the PermAlert Leak Detection System (the "System") will be free from defects in materials and workmanship for a period of twelve (12) months from the date of first use of the System or eighteen (18) months from the date of shipment by Seller to Buyer of the System; whichever is earlier. Seller is not responsible for damage to the System occurring in transit or arising from the installation, alteration or repair of the System by persons other than Seller's employees, or from any abnormal or improper use of, negligence with respect to or accident affecting the System. Seller's sole obligation and liability, and Buyer's sole remedy, under this warranty shall be the repair or replacement, at Seller's election, by Seller of any defective materials or workmanship covered by this warranty, without the charge to Buyer. Repaired or replacement materials shall be delivered to Buyer f.o.b. Seller's plant or f.o.b. such other location as Seller shall designate. Seller shall not be responsible for any product returned to Seller without Seller's prior express consent. Buyer shall be responsible for returning the defective or non-conforming product(s) to Seller at Buyer’s expense. No claim shall be permitted under the warranty contained herein unless Buyer notifies Seller in writing within ten (10) days after Buyer first hears of facts giving rise to any such claim and unless notice is given within the warranty period as provided above. In order to be valid, any notice sent to Seller in connection with said claim under this warranty must reasonably specify the defect which is the subject of such claim. Buyer shall be responsible for testing and inspecting the System promptly after receipt and thereafter at such intervals as are reasonably prudent so as to inform Seller of any defects which exist in the System. Notwithstanding the filing of a claim hereunder, this warranty shall expire after the warranty period in respect to materials and workmanship which are not then the subject of a proper claim.

To the maximum extent permitted by law, Buyer irrevocably waives all claims against Seller for money damages relating to the condition, use and performance of the goods sold pursuant hereto, including claims based upon tort, strict liability, negligence and product liability. Notwithstanding the provisions of the preceding sentence, if money damages are assessed against Seller, in no event shall Seller's liability for such damages exceed the purchase price of products sold by Seller.

IN NO EVENT, WHETHER BECAUSE OF A BREACH OF WARRANTY OR REPRESENTATION OR ANY OTHER CAUSE, WHETHER BASED UPON CONTRACT, TORT, WARRANTY OR OTHERWISE, ARISING OUT OF THE PERFORMANCE OR NON-PERFORMANCE BY SELLER OF ITS OBLIGATIONS UNDER THIS AGREEMENT OR WITH RESPECT TO THE PRODUCTS SOLD PURSUANT HERETO SHALL SELLER BE LIABLE FOR LOST EARNINGS, INCOME OR PROFITS OR INDIRECT, INCIDENTAL CONSEQUENTIAL DAMAGES.

THE IMPLIED WARRANTIES OF MERCHANTABILITY AND FITNESS FOR A PARTICULAR PURPOSE AND, EXCEPT AS SPECIFICALLY SET FORTH HEREIN, ALL OTHER WARRANTIES AND REPRESENTATIONS, EXPRESS OR IMPLIED, ARE HEREBY DISCLAIMED AND EXCLUDED. NOTHING SHALL BE CONSTRUED AS AN ADDITIONAL WARRANTY UNLESS SPECIFICALLY DESIGNATED AS SUCH IN WRITING AND SIGNED BY THE SELLER, IN WHICH CASE SUCH ADDITIONAL WARRANTY SHALL BE SUBJECT TO THE PROVISIONS OF THE APPROPRIATE PARAGRAPHS HEREIN AS TO DURATION AND LIMITATION OF REMEDY UNLESS SUCH ADDITIONAL WARRANTY EXPRESSLY VARIES SUCH PROVISIONS.

Extended warranty period may be available. Contact PermAlert for more information.

PermAlert™
Division of Perma-Pipe, Inc.
6410 West Howard Street
Niles, Illinois 60714-3302
www.permalert.com